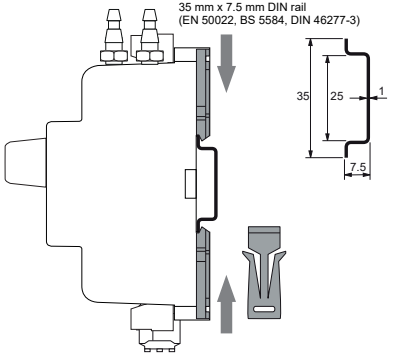

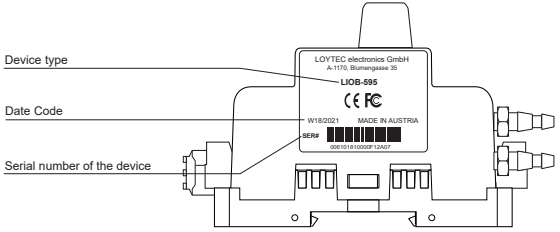

Document 88099201 Web edition
10/2026
Printed in Austria
Data is subject to change

LOYTEC
A Brand of Delta
http://www.loytec.com
support@loytec.com

LIOB-595-VAV I/O Controller + MP-Bus Actuator

Installation instructions

Instructions de montage
Montageanweisung
Montagevoorschrift
Instruzioni di montaggio
Instrucciones de montaje
Monteringsanvisning

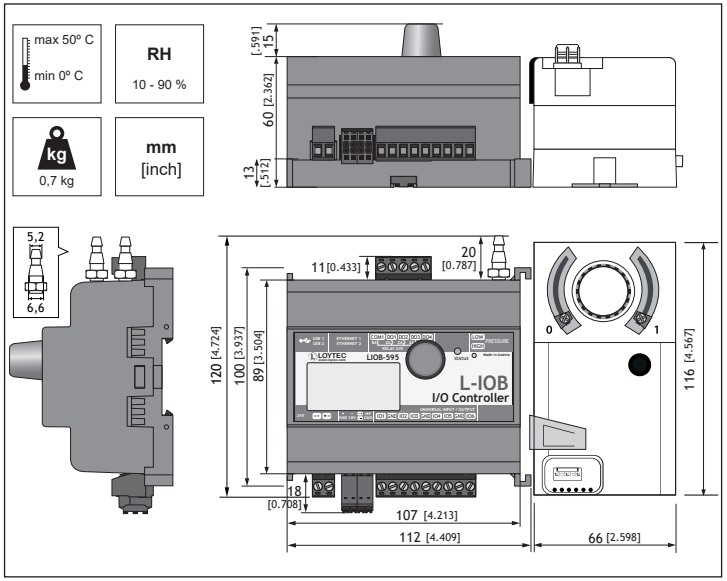

LOYTEC
A Brand of Delta

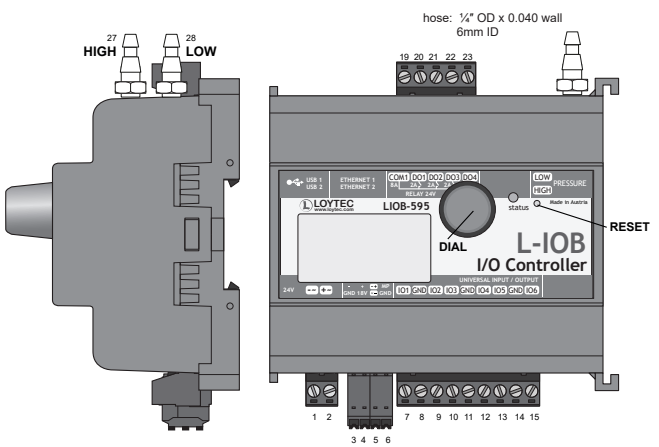

BUTTONS	
RESET	Reset Button
DIAL	Turn-and-Push Dial

STATUS LED	
OFF	Unconfigured
GREEN	In Operation
ORANGE	In Manual / Override mode
RED	Error
FLASHING	Traffic

CONNECTORS		
Input 24V Power Supply	01	24 V MINUS or AC
	02	24 V PLUS or AC

CONNECTORS		top	bottom
L-STAT/ MP-BUS	03	RS-485 -	GND
	04	RS-485 +	Output: 18V (max 150 mA)
	05	+ ~*1	_ ~*2
	06	MP-BUS	GND
UNIVERSAL INPUT / OUTPUT	07	IO1	IO1-IO4 + GND Resistive inputs
	08	GND	
	09	IO2	
	10	IO3	
	11	GND	
	12	IO4	
	13	IO5	IO5 + GND Voltage inputs
	14	GND	
	15	IO6	IO6 + GND Analog outputs 0-10 VDC

*1) internally connected to terminal 02
*2) internally connected to terminal 01

DHCP: ON
User: admin

Please update the firmware of the device first, see www.loytec.com/support/download

License Notice: This product contains components covered by the GPL and LGPL. Details on device Web UI or http://loytec.com/os/

CONNECTORS		
DIGITAL OUTPUT RELAY	19	Output Common
	20	Output DO1 2A @ 24VAC (resistive load)
	21	Output DO2 2A @ 24VAC (resistive load)
	22	Output DO3 2A @ 24VAC (resistive load)
	23	Output DO4 2A @ 24VAC (resistive load)
PRESSURE	27	Pressure Input HIGH
	28	Pressure Input LOW



Weidmüller
BLZP 5.08/02/180
BLZP 5.08/05/180
BLZP 5.08/09/180

4.5 lb-in/0.5 Nm

0.2 - 2.5 mm²



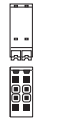

Weidmüller
B2CF 3.50/04/180

0.14 - 1.5 mm2
AWG26-AWG16

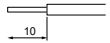

L-ACT Actuator

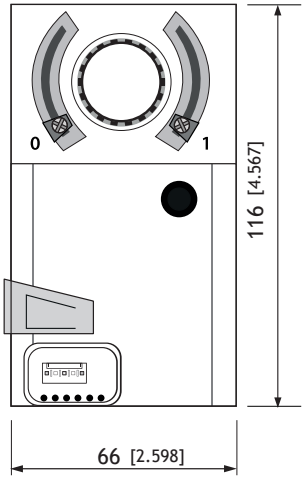

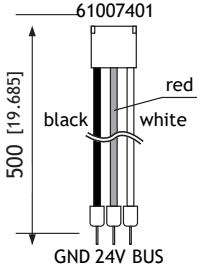



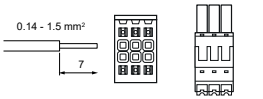

For this terminal type, remove the connector and strip the wires as shown.

