

Delta™ CONTROLS
A Brand of Delta

CON-T1L

A Retrofit Revolution.

The CON-T1L Module is a plug-and-play media converter that unlocks 10BASE-T1L over a single twisted pair, transforming legacy twisted pair wiring (RS-485, MS/TP) into fast, Ethernet/IP-ready networks. Whether in retrofit projects or new installs, it bridges the gap between high performance and existing wiring infrastructure- without disruption or excessive costs.

Bring Your Building to the Future—Without Rewiring It.





Key Features

Future-proof Retrofits
Reuse Legacy Twisted Pair wiring to achieve Ethernet-level speed and reliability—no rip-and-replace required.

Fast, Future-Proof Upgrades
Adds IP networking to older wiring layouts, giving buildings a modern BMS without overhauling the entire infrastructure.

Plug-and-Play Simplicity
No configuration or addressing required - just connect and go!

Designed for Retrofit & Beyond
Perfect for unitary controllers and retrofit scenarios where distance and cable type are limiting factors or simply to bridge the gap between older technology and new controllers.



Red5 Series

CON-T1L

Description

The CON-T1L is a network media converter that has a single CAT5/6 RJ45 connector and two single twisted pair 10BASE-T1L ports. The CON-T1L takes a standard CAT5/6 Ethernet signal and converts it to 10Base-T1L over twisted pair cable. Perfect for retrofit and new installations alike, the CON-T1L allows you to take advantage of high speed Ethernet/IP communication on single twisted pair cabling.



Application

The primary purpose of the CON-T1L is to provide high-speed data transmission over long distances using a single twisted pair of copper wires.

It is useful in industrial settings or in scenarios where infrastructure needs to minimize cabling costs and complexity, as with unitary controllers in a building automation systems architecture.

Features

- No configuration or addressing required
- Dual T1L Ports with bypass
- Uses local Red5 power bus or separate power supply
- Can be added to any BMS network
- Allows the use or reuse of single shielded twisted pair cabling

Ordering

Order the CON-T1L according to the following product numbers:

338364	Network media converter with 2 single twisted pair 10BASE-T1L ports with bypass technology

Specifications

Connectors
Removable screw-type terminal connectors

Wiring Class
Class 2 / SELV

Power
24VAC, 50/60 Hz @ 5.5VA max
24VDC, 2W max
-OR-
Red5BUS power

Communication Ports
Single CAT5/6 RJ45 connector

2x 10BASE-T1L ports with bypass technology
BACnet IP, BACnet over Ethernet, BACnet/SC

Ambient Rating
–30°C to 55°C (–22°F to 131°F)
10% to 90% RH (non-condensing)

Dimensions
111 x 58 x 54 mm (4.37 x 2.28 x 2.13 in)

Weight
103 g (0.22 lb)

Compliance
CE
FCC

Listings
cUL Listed
UL 916 Listed

Updated October 3, 2025

Subject to change without notice.

© 2025 Delta Intelligent Building Technologies (Canada) Inc. All rights reserved.

Engineering Ethernet over a Single Pair: 10Base-T1L for Modern Networks

Gamal Mustapha, P.Eng
Director of Product Management
Delta Intelligent Building Technologies (Canada) Inc.

Agenda

01

What is T1L?

- What is 10Base-T1L.
- Cable characteristics of T1L – Line length, cable specifications.
- T1L deployment – Replacement of RS485 networks, compatibility with ethernet protocols, EMC and topology planning.
- Protocols & Software Integration – protocol stacks over 10Base-T1L including BACnet/SC .

02

How to Use T1L

- Delta Controls CON-T1L
- Integration of 10-Base-T1L in other Delta products
- Case-study review. Intermittent MS/TP network upgraded to 10Base-T1L

03

Quiz

T1L – RETROFIT READY

Bring your building to the future, without rewiring it.

Reuse legacy twisted pair wiring to achieve Ethernet-level speed and reliability—no rip-and-replace required.

- **Reuse existing RS-485 twisted pair or low-capacitance wire (18–22 AWG).**
- Avoid disruptive, expensive cabling overhauls.
- **Seamlessly replace MS/TP or LonWorks topologies**.
- Reaches tested distances of 600 meters
- Supports phased deployment

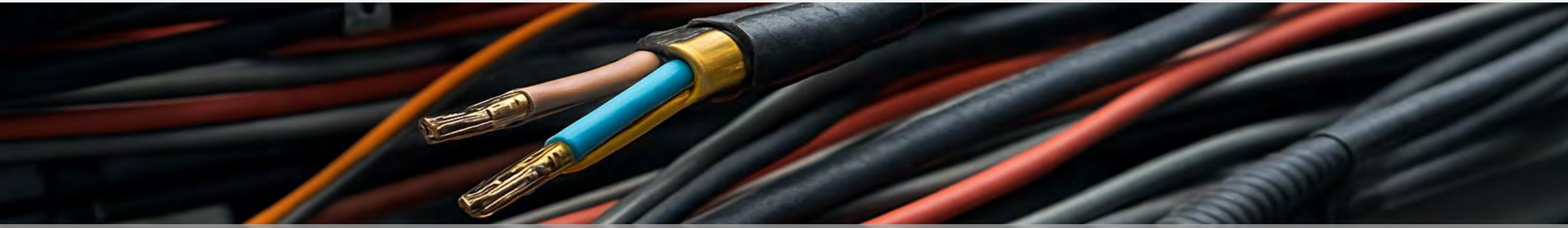

THE TECHNOLOGY – THE CHALLENGE

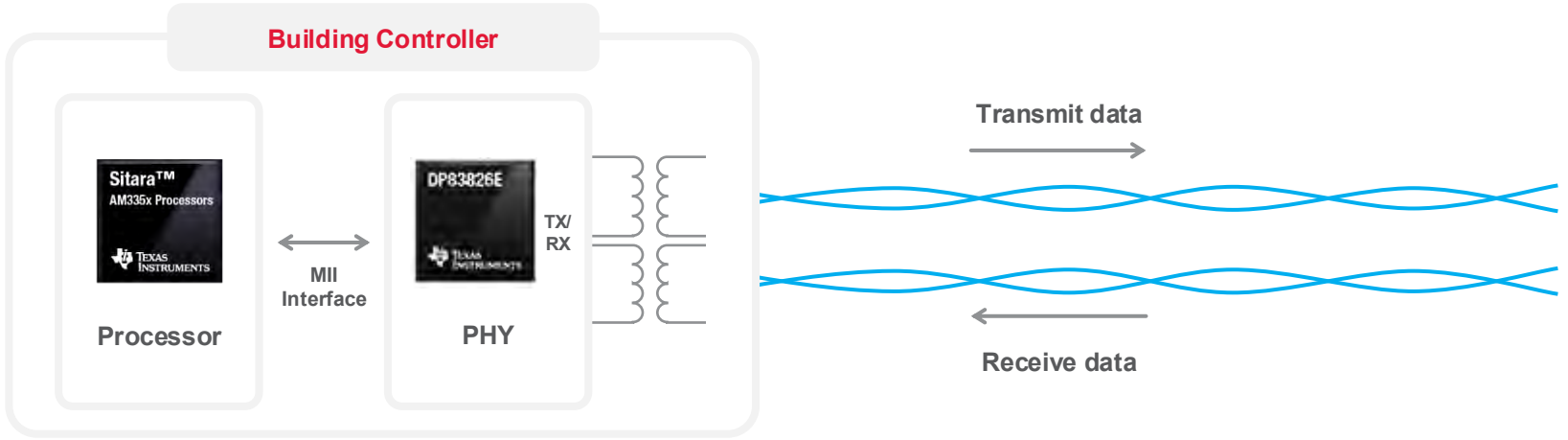

01

Field devices and sensors often require long distance communication.

02

Traditional barrier to Ethernet is cost and distance.

03

Cable Usage challenge:
Ethernet uses 2-4 pairs, not designed for single pair comms.

04

Operates at high frequencies (>100 MHz) → resulting in EMI interference.

THE TECHNOLOGY – THE SOLUTION

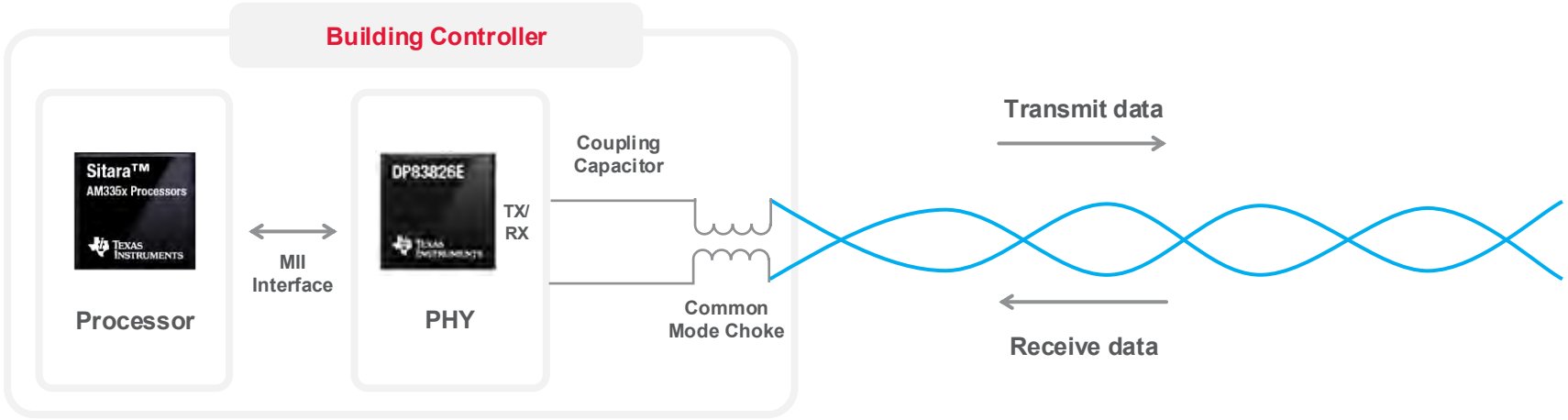

Single Pair, Further Reach

- 10Base-T1L: 10 refers to Ethernet at 10 Mbps, BASE refers to baseband signals, T twisted pair, 1 single pair and L long range
- Maximum transmission distance based on T1L standard is 1km between devices.
- Reaches tested distances of 600 meters

Behind the Speed.

- Full-duplex communication (send & receive at the same time)
- Echo cancellation handles reflections – no need for terminations

Not a protocol conversion tool...

T1L is compliant with IEEE 802.3cg

T1L is a media conversion that operates at the physical level of communication.

SINGLE PAIR ETHERNET

STANDARDS	IEEE 802.3cg 10BASE-T1L	IEEE 802.3bw 100BASE-T1	IEEE 802.3bp 1000BASE-T1
Bandwidth	10Mbps	100Mbps	1000Mbps
Cable reach specification	1000m (2.4V p2p); 200m (1V p2p)	50m	15m
Power dissipation	<110mW	<220mW	<600mW

+ Other speeds are available, for building controls we will focus on 10Base-T1L.

CABLE CHARACTERISTICS REQUIRED FOR T1L

- Single twisted pair (shielded or unshielded).
- Typically, 18AWG to 22 AWG wire.
- Supports up to 1000m (shielded, low-noise environments), best practice is to limit to a maximum of 500 meters

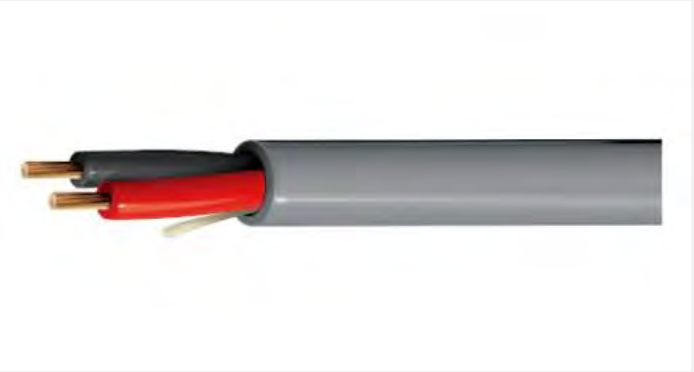

ELECTRICAL CHARACTERISTICS

- DC Resistance < 50 ohms/km per conductor.
- Capacitance < 50 pF/m is better for long runs.
- Cables designed for RS-485 or low capacitance twisted pair often meet or exceed 10Base-T1L requirements.

EXAMPLES

- Belden 3076F (shielded twisted pair).
- Generic 22 AWG twisted pair with low capacitance and 100-ohm impedance.

CABLE COMPLIANCE

$$\text{Insertion Loss } (f) < 10\left(1.23 \times \sqrt{f} + 0.01 \times f + \frac{0.2}{\sqrt{f}}\right) + 10 \times 0.02 \times \sqrt{f} \quad (2)$$

$$\text{Return Loss } [dB] >= \begin{cases} 9 + 8 \times f & \text{for } 0.1 \le f \le 0.5 \\ 13 & \text{for } 0.5 \le f \le 20 \end{cases} \quad (5)$$



Delta CONTROLS
A Brand of Delta

RELIABLE AND SAFE COMMUNICATION

- Galvanic Isolation (no need to ground controllers as you need to with RS485)
- Protection from ground loops
- Surge and transient protection
- Long distance communication stability
- Safety compliance

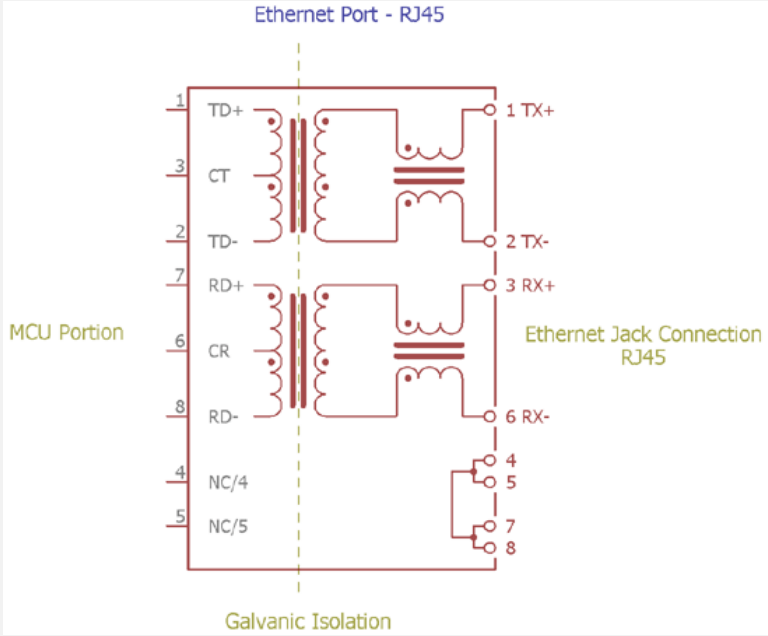

Delta CONTROLS
A Brand of Delta

Network Topology

Network Topology

- Point-to-point connection. No branches.
- Requires a switch or media converter to interface RS485 wiring with standard Ethernet networks.
- Up to 64 devices per trunk (same as MS/TP)
- Take pass-through into consideration when considering maximum distance.

Physical Layer Conversion

- 10Base-T1L is **not electrically compatib**le with 10Base-T or 100Base-TX or 10Base-T1S
- Direct cable connection between a 10Base-T1L device and a standard RJ45 Ethernet port **will not work**.
- **You must use:**
  - **T1L-to-RJ45 converters**
  - Or a **host device with built-in 10Base-T1L transceiver**

NETWORK PROTOCOLS

LAYER

- 7 – Application Layer
- 6 – Presentation Layer
- 5 – Session Layer
- 4 – Transport Layer
- 3 – Network Layer
- 2 – Data Link Layer
- 1 – Physical Layer

Standard Ethernet Protocols
(Layers 2–7)

Because 10Base-T1L conforms to the IEEE 802.3 Ethernet standard, it supports:

- IPv4 / IPv6
- TCP / UDP
- HTTP / HTTPS
- MQTT
- BACnet/IP, Modbus TCP, OPC UA, PROFINET, EtherNet/IP.
- Any IP-based industrial protocol that runs over Ethernet.

These protocols run **above the physical layer**, so they will communicate and transmit identical to any other Ethernet type.

Industrial Ethernet Protocols

10Base-T1L is well-suited for industrial and building automation, making it compatible with:

- Modbus TCP
- BACnet/IP
- BACnet Ethernet
- BACnet/SC

10Base-T1L
Solution

Delta™
CONTROLS
A Brand of Delta

CON-T1L SOLUTION

Adding performance to existing legacy infrastructure.



CON-T1L

- **Vendor Agnostic - Add T1L capability to any Ethernet device.**
- Natively powered through the Red5Bus port on Red5-PLUS/EDGE devices.

Red5 EDGE-Vxxx-T1L

- **Built-In Full daisy chain Ethernet/IP with bypass technology.**
- Value and Performance on existing twisted pair.

(Coming Dec 2025)



CON–T1L

CON-T1L

- RJ45 Port to connect to standard 10/100 Ethernet network
- Dual port 10BASE-T1L with bypass.
- 24AC/DC or Red5Bus powered.
- Up to 10Mb/s on single twisted pair.
- System Agnostic Can be added to any standard CAT5 network.

View the Installation Guide →

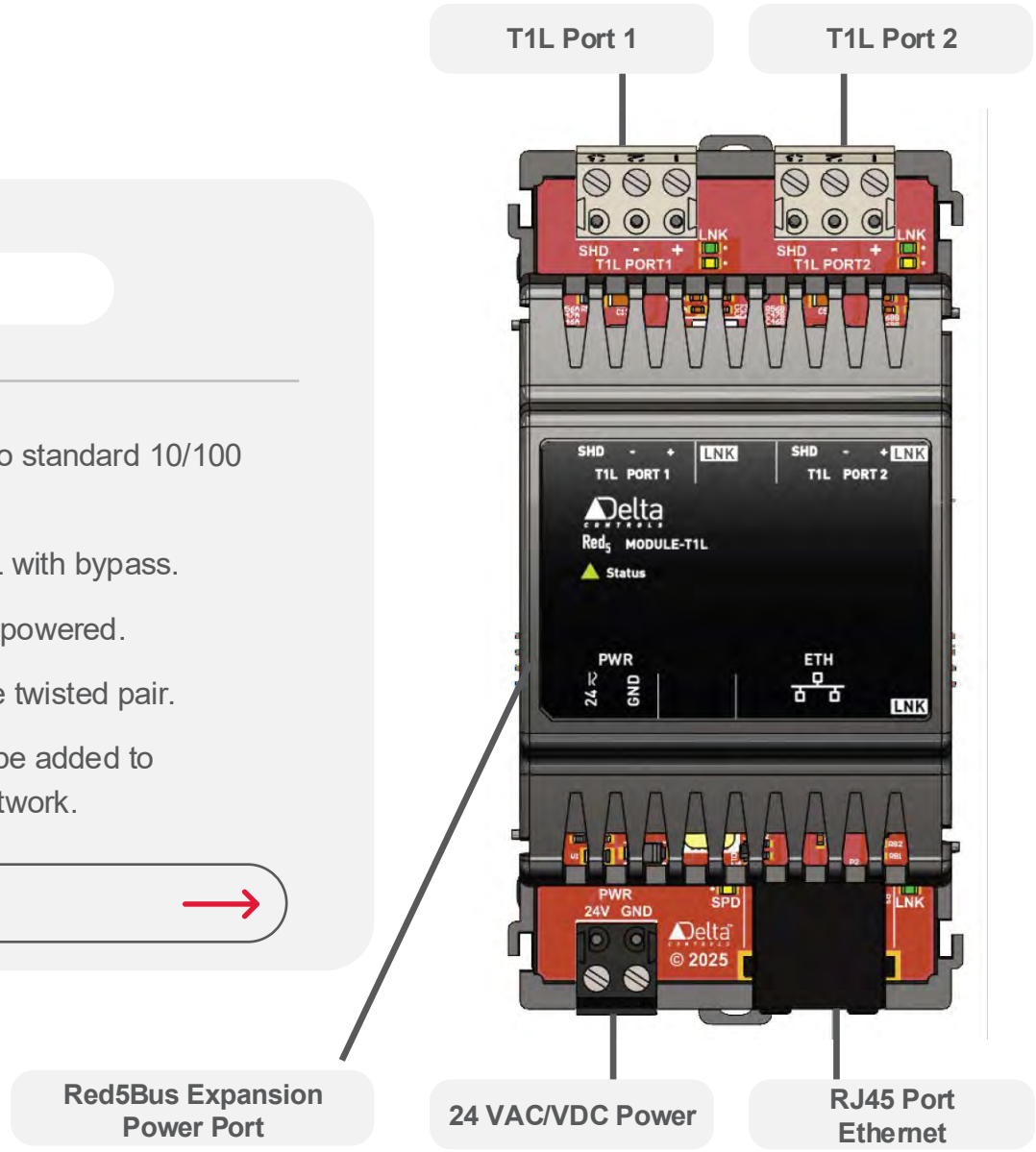

Red5 EDGE-Vxxx-T1L

- Red5 VAV with Dual port 10BASE-T1L with bypass.
- 24AC/DC powered.
- Up to 10Mb/s on single twisted pair.
- Supports BACnet/SC and Ready for your IoT applications.

EDGE-VAV-T1L

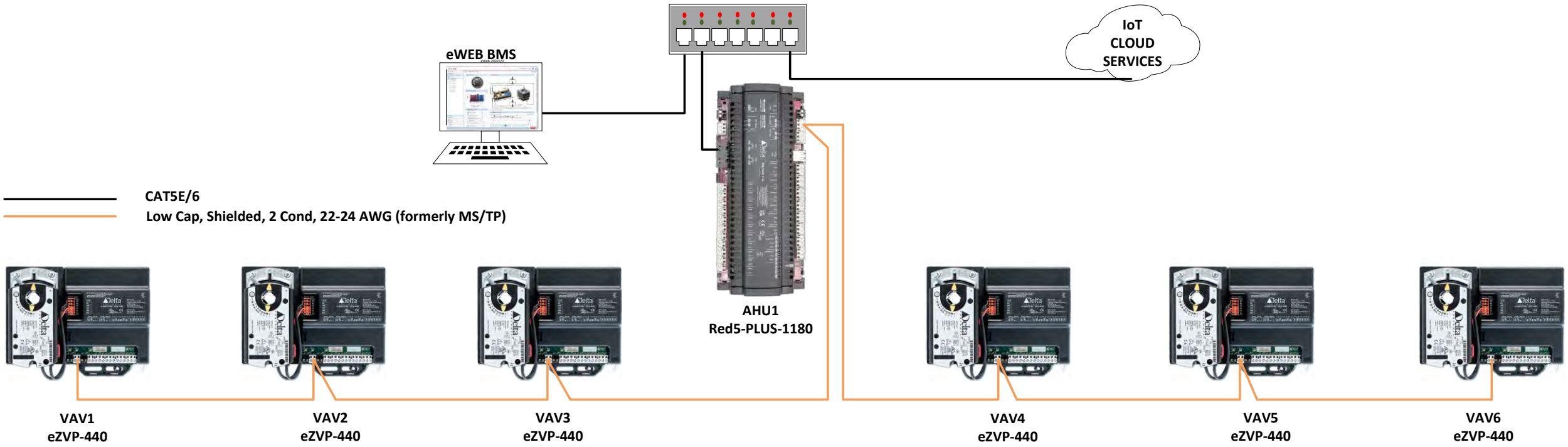

Standard MS/TP network – multi-drop bus

EDGE-VAV-T1L

enteliSKETCH

BACnet/SC secure connect

MQTT

python

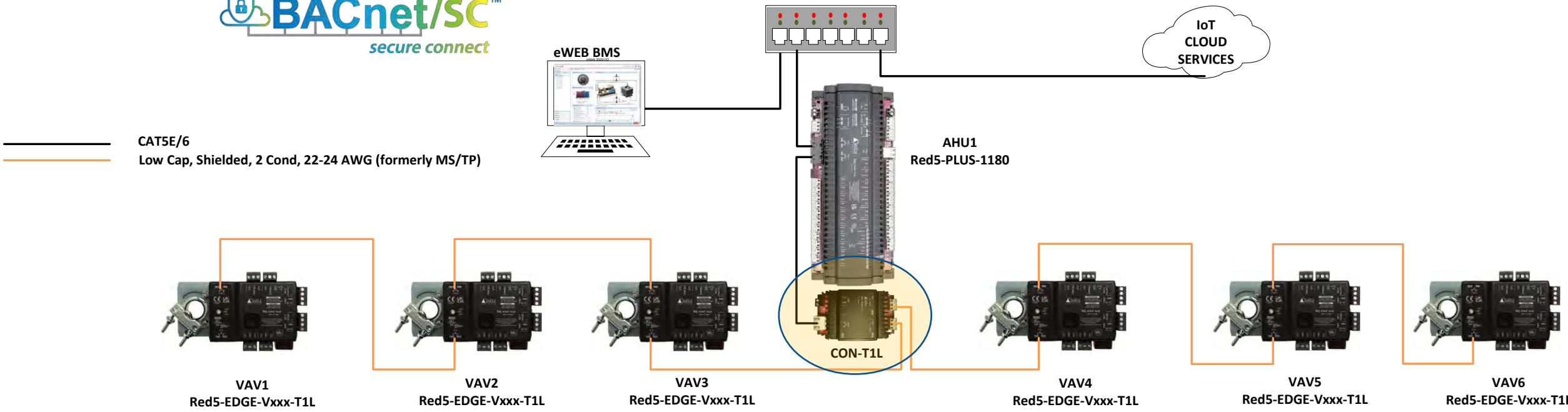

10Base-T1L Network (using T1L devices)

CON-T1L

enteliSKETCH

BACnet/SC™ secure connect

MQTT

python™

CAT5E/6

Low Cap, Shielded, 2 Cond, 22-24 AWG (formerly MS/TP)

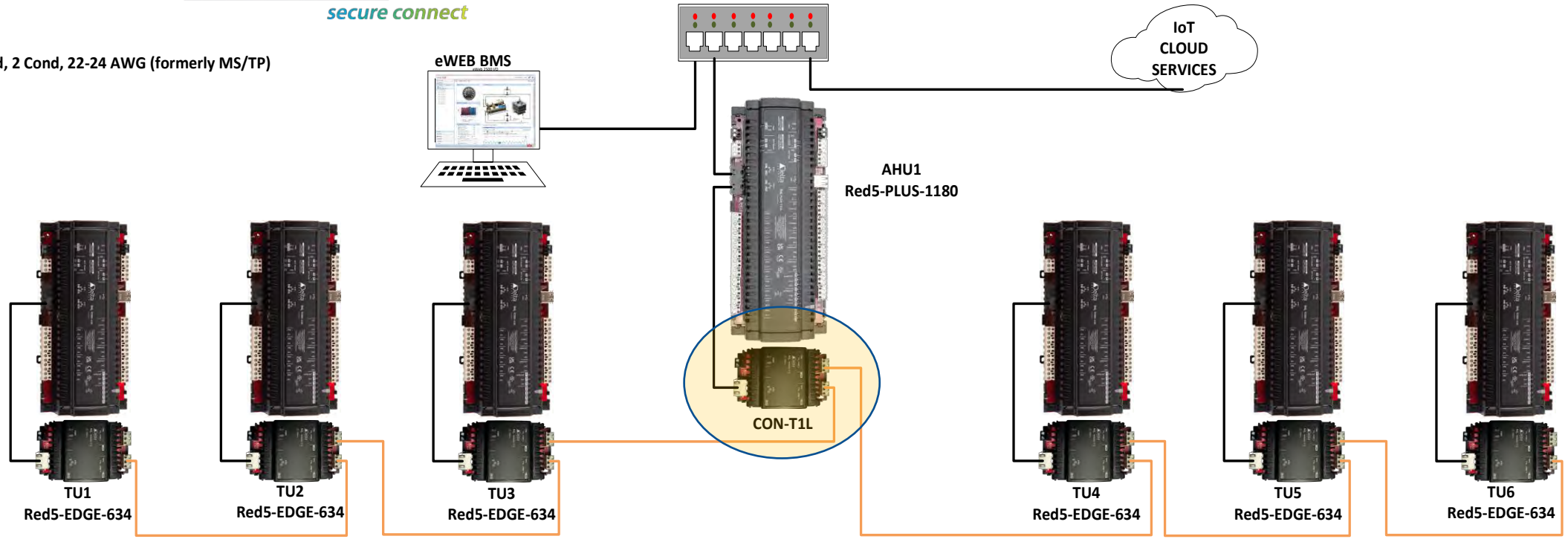

10Base-T1L Network (using CON-T1L media converters)

T1L and MS/TP combined – Phased Upgrade

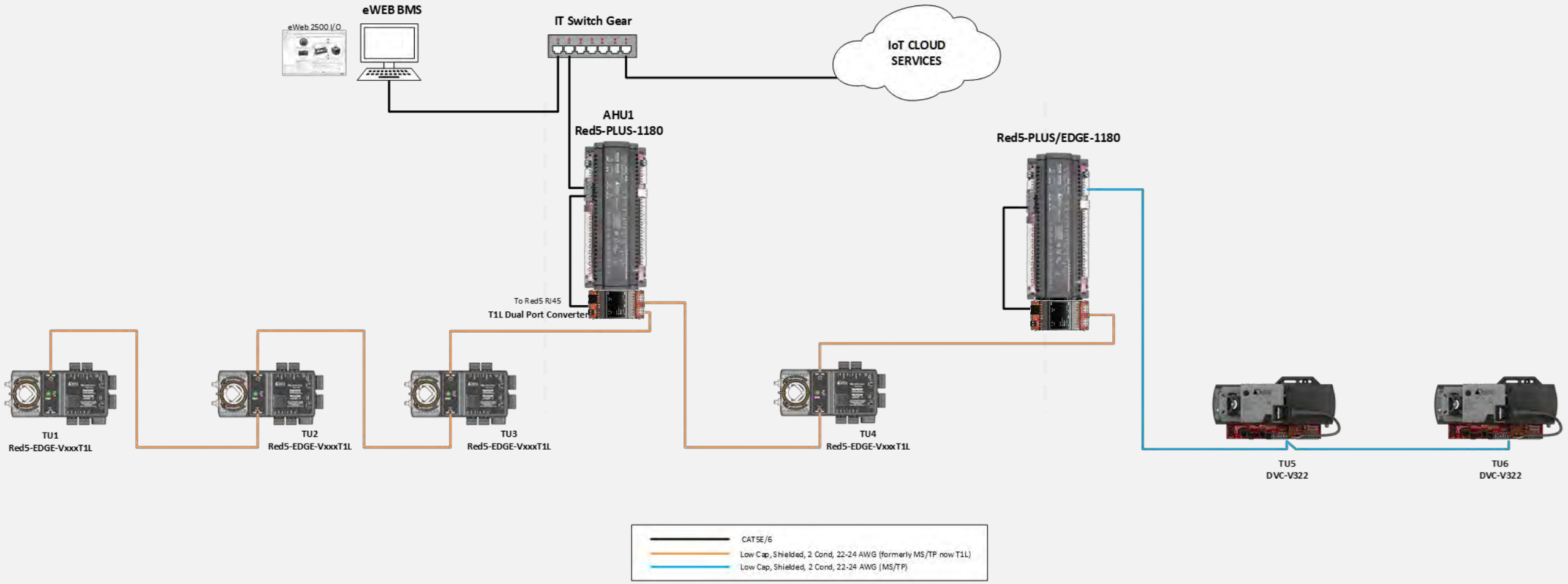

T1L Network combined with MS/TP Network
Phased upgrade approach

Case Study

Delta™ CONTROLS
A Brand of Delta

T1L CASE STUDY – SENIOR LIVING, VICTORIA, BC







PROBLEMS & CUSTOMER PAIN POINTS

Mix and Matched Legacy Wire

- Mixture of 18AWG and 22AWG cable.
- System Level controllers residing on MS/TP backbone.

Slow or Unresponsive Network Devices

- In some cases, data wouldn't load at all.
- Graphic Loading was sporadic.
- Object lists take 20secs/30secs/3 minutes to load.

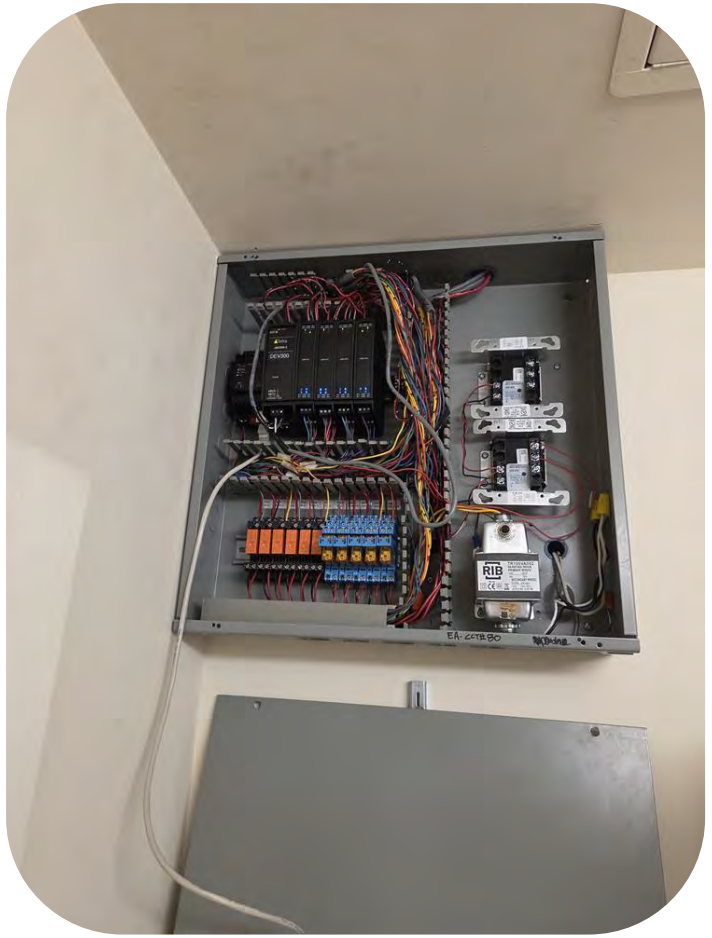

Further Details

- \+ Former Alerton Site
- \+ No access to cabling in walls or ceiling
- \+ Mixture of V3/V4/Third Party Devices
- \+ Easy access to controllers

ARCHITECTURE BEFORE

CAT5E/6

Low Cap, Shielded, 2 Cond, 22-24 AWG (MS/TP)

Shielded 18AWG, Twisted Pair



eWEB CLOUD BMS

BACnet SC Node
V4 eBMGR
Dev100



IT Switch Gear



IoT CLOUD
SERVICES



RTU1
V3 DAC-1180E
Dev101

162 obj ~22 sec
load time



BLR1
V3 eBCON
Dev 200



AHU1
V3 eBCON
Dev 300

292 obj ~3 min load
time and then…

200 obj ~14 sec
load time



AHU2
V3 eBCON
Dev 400



Delta CONTROLS
A Brand of Delta

ARCHITECTURE AFTER

CAT5E/6

Low Cap, Shielded, 2 Cond, 22-24 AWG (T1L)

Shielded 18AWG, Twisted Pair (T1L)

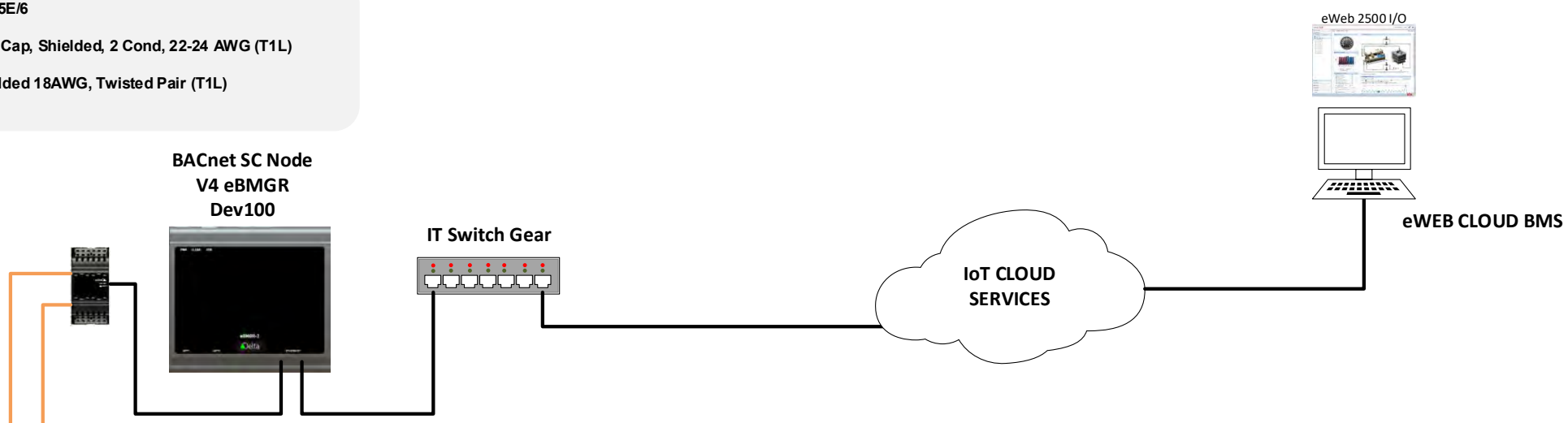

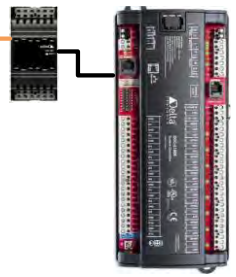

RTU1
V3 DAC-1180E
Dev101

162 obj ~5 sec
load time



BLR1
V3 eBCON
Dev 200

182 obj ~4 sec
load time

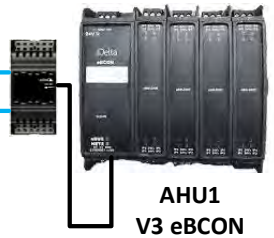

AHU1
V3 eBCON
Dev 300

292 obj 4.3 sec



AHU2
V3 eBCON
Dev 400

200 obj 5.75 sec
load time



RTU
pCOWeb
Dev77000

169 obj ~6.5 sec
load time

Delta CONTROLS
A Brand of Delta

Improved Object and Graphic Loading

- Device Object Lists loaded 2-4x Faster after adding T1L Modules.
- Devices that previously intermittent or offline, were stable, and had faster response time.
- eWEB Graphic pages loaded consistently in 2-4 seconds.

Installation Made Easy

- Save Days in Installation time.
- Delivers tangible performance improvements that address real field limitations.



T1L INSTALL MADE EASY

Installation made easy.

“Installation is a ‘piece of cake’. Footprint is small enough to fit into already loaded enclosures. Power draw is minimal so can be shared with existing controller. Not being forced to use DC power is also nice. End performance results were great! We had controllers that wouldn’t load objects at all. They now load all the objects in 5-10seconds.”

ITC Victoria
Beta tester for the CON-T1L



T1L SOLUTION – SUMMARY

- **Version and Vendor Agnostic.**
- **Seamless integration to Red5 PLUS/EDGE.**
- **Ease of Installation (under 2 hours for 6 devices).**
- **Customer –** Willing To Pay.
- **Customer High Impact –** Adds performance and value for existing network infrastructure.
- **Benefit to Partner and End Customer –** Everyone wins.

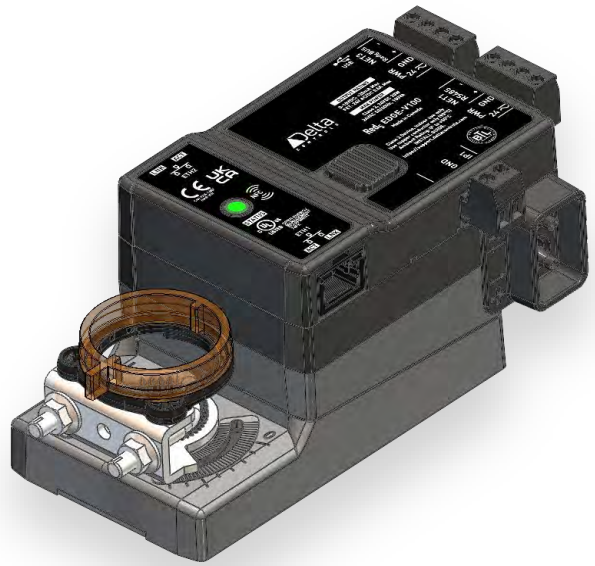



Delta CONTROLS
A Brand of Delta

T1L SOLUTION – SUMMARY

Benefits of 10Base-T1L

01

Long Cable Runs –
up to 1 km. Recommend 200m to cover networks with poor wiring.

02

Simple Wiring –
single pair vs multiple pairs, uses terminal blocks verses RJ45 modular connectors.

03

Interoperability –
full Ethernet compatibility at all layers above the physical layer

04

Backward Integration –
can reuse existing MS/TP cabling.

05

Faster Comm Speed -
10Mbps faster graphics, faster upgrades, better network performance

06

Designed for harsh environments –
better noise immunity.

CON-T1L Installation Guide

Delta Controls

Copyright Information

No part of this document may be reproduced, transmitted, transcribed, stored in a retrieval system or translated into any language (natural or computer), in any form or by any means, without the prior written permission of Delta Controls Inc.

Limited permission is granted to reproduce documents released in Adobe Portable Document Format(PDF) electronic format in paper format. Documents released in PDF electronic format may be printed by end users for their own use using a printer such as an inkjet or laser device. Authorized distributors of Delta Controls Inc. products (Delta Partners) may print PDF documents for their own internal use or for use by their customers. Authorized Delta Partners may produce copies of released PDF documents with the prior written permission of Delta Controls Inc.

Information in this document is subject to change without notice and does not represent a commitment to past versions of this document on the part of Delta Controls Inc. Copyright ©2025 Delta Controls Inc. All rights reserved

Table of Contents

1. Description
2. Specifications
3. Important Information
4. Application
5. Supported Controllers
6. Highlights
7. Best Practices
8. Network Architecture
9. Positioning
10. Package Contents
11. Cautions and Warnings
12. Dimensions
13. Board Layout
14. Connecting the Module
15. Wiring
16. Daisy Chain Topology
17. Status Indicators
18. FAQs
    1. How do ports independently gauge speed? (i.e., if one port is 100Mb/s, the other is 10Mb/s)
    2. Can I add a converter to my existing MS/TP network?
19. Open Source Licensing

Copyright © Delta Intelligent Building Technologies (Canada) Inc.

Description

CON-T1L is a network media converter that has a single CAT5/6 RJ45 connector and 2 single twisted pair 10BASE-T1L ports. CON-T1L takes a standard CAT5/6 Ethernet signal and converts it to 10Base-T1L over twisted pair cable. Perfect for retrofit and new installations alike, the CON-T1L allows you to take advantage of high-speed Ethernet/IP communication on single twisted pair cabling.

Table of Contents

- Description
- Specifications
- Important Information
- Application
- Supported Controllers
- Highlights
- Best Practices
- Network Architecture
- Positioning
- Package Contents
- Cautions and Warnings
- Dimensions
- Board Layout
- Connecting the Module
- Wiring
- Daisy Chain Topology
- Status Indicators
- FAQs
- Open Source Licensing

Specifications

Power	24VAC, 50/60 Hz @ 5.5VA max 24VDC, 2W max **OR** Red5BUS power
Wiring	CAT5/6 Ethernet Low cap/Shielded, 2 conductor, balanced, twisted pair 22-24 AWG
Connectors	Removable screw-type terminal
Ambient Ratings	–30°C to 55°C (–22°F to 131°F) 10% to 90% RH (non-condensing)
Dimensions	111 x 58 x 54 mm (4.37 x 2.28 x 2.13 in)
Weight	103 g (0.22 lb)

Copyright © Delta Intelligent Building Technologies (Canada) Inc.

Communication Ports	**Ethernet** 1 Ethernet (10/100-BaseT) port 2 10BASE-T1L single twisted pair ports with fail-over bypass
Compliance	CE FCC
Listings	cUL Listed UL 916 Listed

Compliance and conformance documents are available on the CON-T1L product page.

Important Information

The CON-T1L can be installed with any Ethernet switch or controller.

Application

The primary purpose of 10BASE-T1L is to provide high-speed data transmission over long distances using a single twisted pair of copper wires. It is particularly useful in industrial settings or in scenarios where infrastructure needs to minimize cabling costs and complexity, as with unitary controllers in a BAS architecture. T1L provides up to 10Mb/s network speed, which allows for EDGE level IoT capability and BACnet security on legacy network cabling.

With 10BASE-T1L, it’s possible to achieve distances that are longer than the typical 100 meters supported by most standard Ethernet varieties like 10BASE-T or 100BASE-TX. Maximum distance between two T1L devices, is dependent on wire quality and gauge. Typical MS/TP networks utilize 22-24AWG cable. Our testing has shown reliable communication between 2 T1L devices of up to 2000 ft (600m) with standard 24AWG MS/TP cable. Measured impedance of this cable was 50ohms.

Supported Controllers

The CON-T1L is supported with any Delta Controls controller with an Ethernet connection.

Highlights

- Out of the box, no configuration required
- Powered off of external 24VAC/VDC, or directly off of Red5BUS
- Point-to-point T1L allows for easy conversion of daisy-chained MS/TP topologies using existing wiring
- No BACnet addressing, works just like a simple switch
- Compatible with any controller that has an Ethernet connector
- Can be Ethernet or IP
- Supports BACnet/SC
- 2 T1L ports with bypass allow for a daisy-chain style network architecture
- Brings EDGE-level IoT capabilities and BACnet/SC to legacy cabling
- Ideal for Retrofits

Copyright © Delta Intelligent Building Technologies (Canada) Inc.

Best Practices

- Max distance between 2 individual devices is 2,000 feet (cable health dependent) at 24AWG
- Supports a maximum of 64 devices per network
- All cabling will need to be re-terminated at each device with 1 pair of wires per terminal block
- Do not wire any cable in a double, star, or “T” architecture
- MS/TP devices and T1L devices cannot be mixed on the same physical bus (MS/TP will be overwhelmed and stop communicating)
- Testing has shown that while the bypass relays help maintain downstream network devices in the even of a power failure on a CON-T1L, when more than 3 devices lose power on a single trunk, the network impedance increases to a point where the network will no longer function. Ensure that you allow for this in your design

Network Architecture

The T1L network is wired in a daisy-chain type architecture from device to device. Each twisted pair set is wired into its own individual terminal block (rather than 2 pairs of wire in a single terminal block). There are bypass relays between the 2 T1L terminal blocks to temporarily maintain the network in case of a power failure.

Note that there is no bypass between the RJ45 and T1L ports.

The image below shows standard 100Base-T Red5 controllers with a CON-T1L at each device:

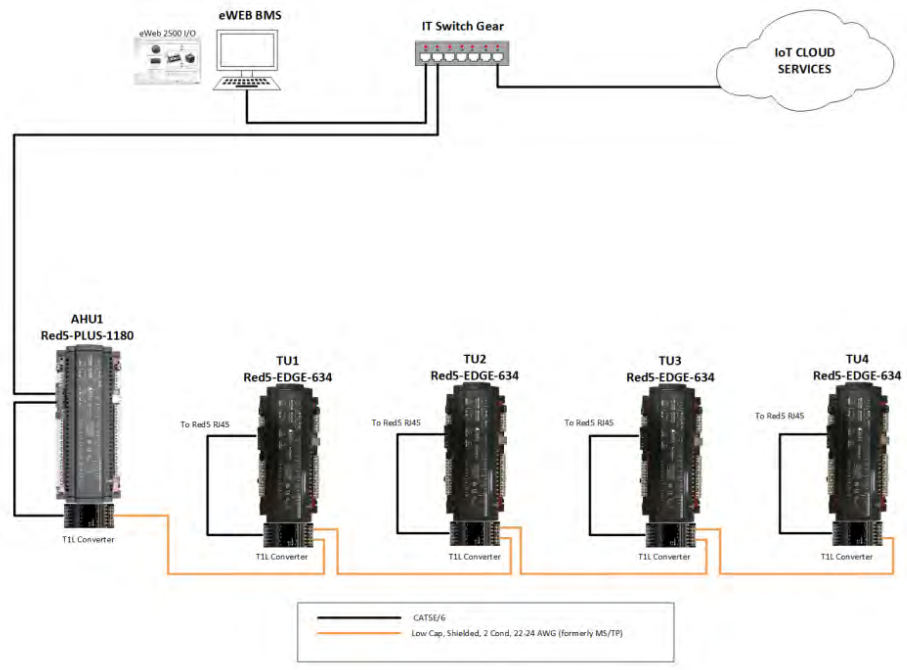

The image below shows a standard Red5-PLUS controller with a CAT5/6 connection

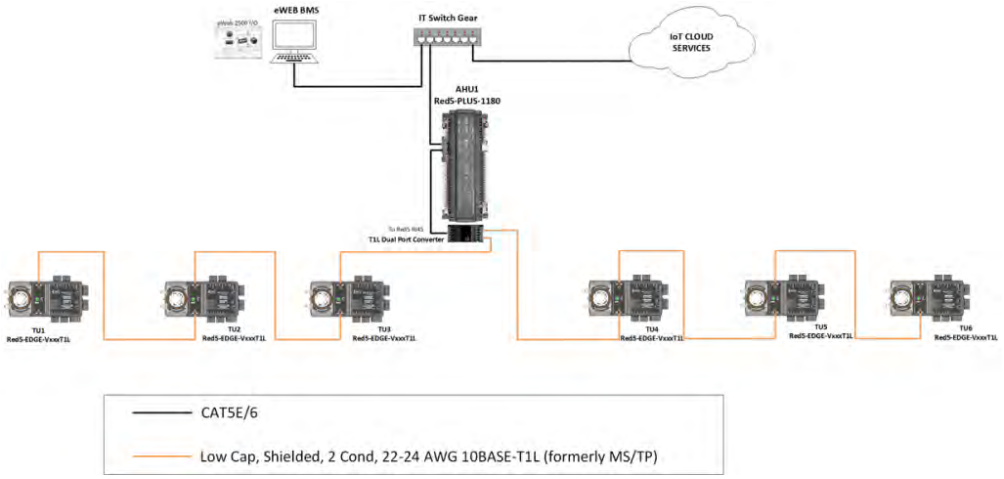

Positioning

The CON-T1L module will not work if used in position 5 on the Red5-PLUS/EDGE-ROOM (4 local modules) or the expand module (Red5-EXPAND-04). We recommend keeping it in position “0”, mounted directly to the Red5-EDGE I/O or Red5-ROOM.

If connecting directly to the onboard CAN port or a Red5-PLUS/EDGE device, Do NOT use an external power supply for the CON-T1L as power is provided by the Red5 controller.

Package Contents

- Product: CON-T1L

Cautions and Warnings

- This product is an electrostatically sensitive device. Proper ESD protection such as a ground strap should be used when installing this product so that damage to the product does not occur.
- Equipment damage or loss of data may occur if these procedures are not followed as specified.

Copyright © Delta Intelligent Building Technologies (Canada) Inc.

Dimensions

Dimension	mm	inches
A	54	2.13
B	111	4.37
C	58	2.28
D	49	1.93
E	46	1.81

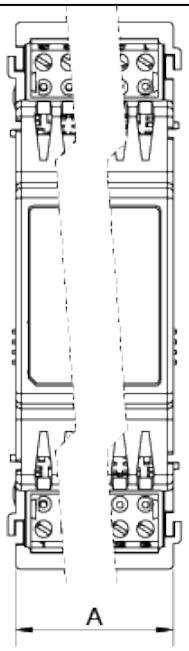

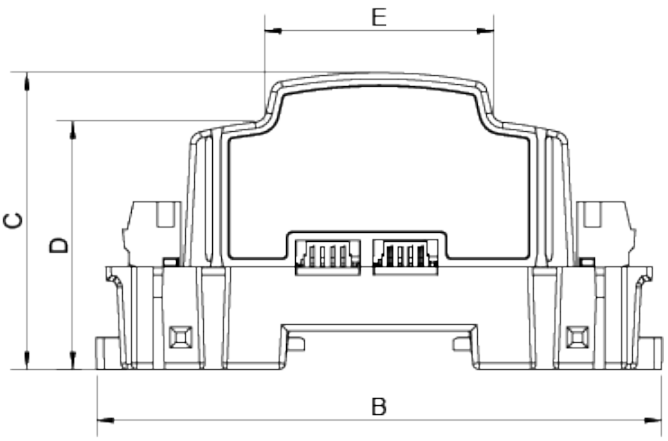

Board Layout

Copyright © Delta Intelligent Building Technologies (Canada) Inc.

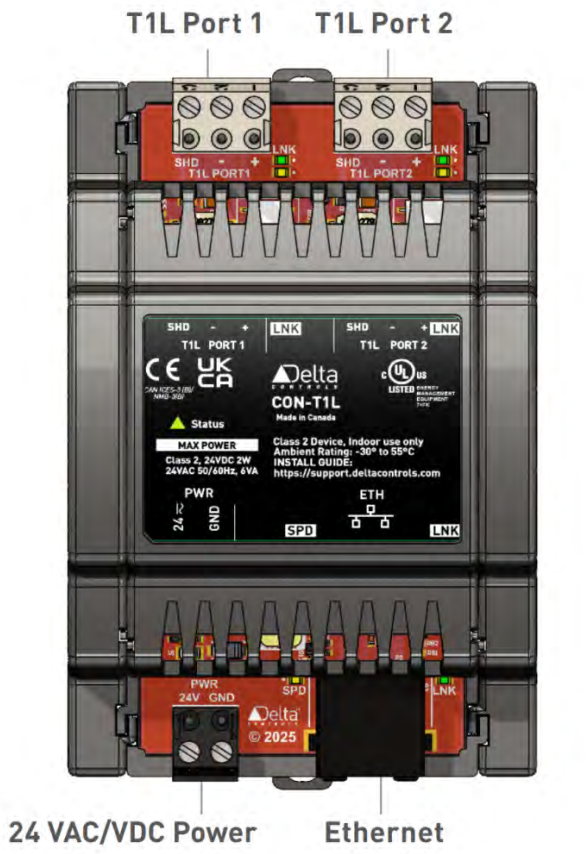

Connecting the Module

The CON-T1L connects into one of the Ethernet ports (RJ45) of an Ethernet-supported controller or network switch.

The CON-T1L can either be powered by external 24 VAC/VDC via the power-in terminal blocks, or it can be connected to the local Red5Bus port 14VDC connection.

Wiring

The CON-T1L connected to and powered by the local Red5Bus port of a Red5-PLUS-11xx:

Copyright © Delta Intelligent Building Technologies (Canada) Inc.

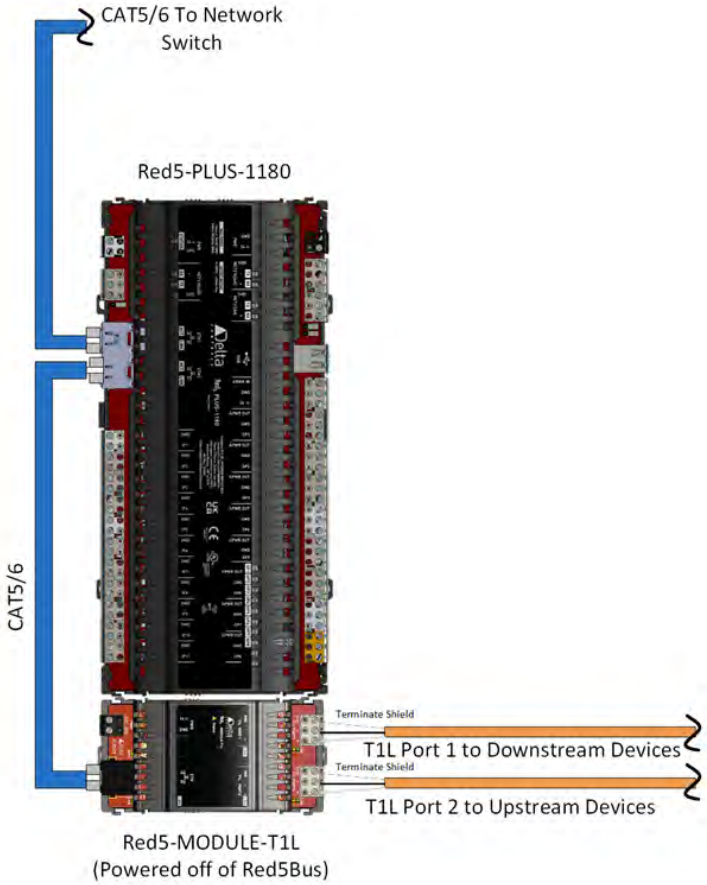

The CON-T1L connected directly to a network switch and powered by 24VAC/VDC from an external power supply:

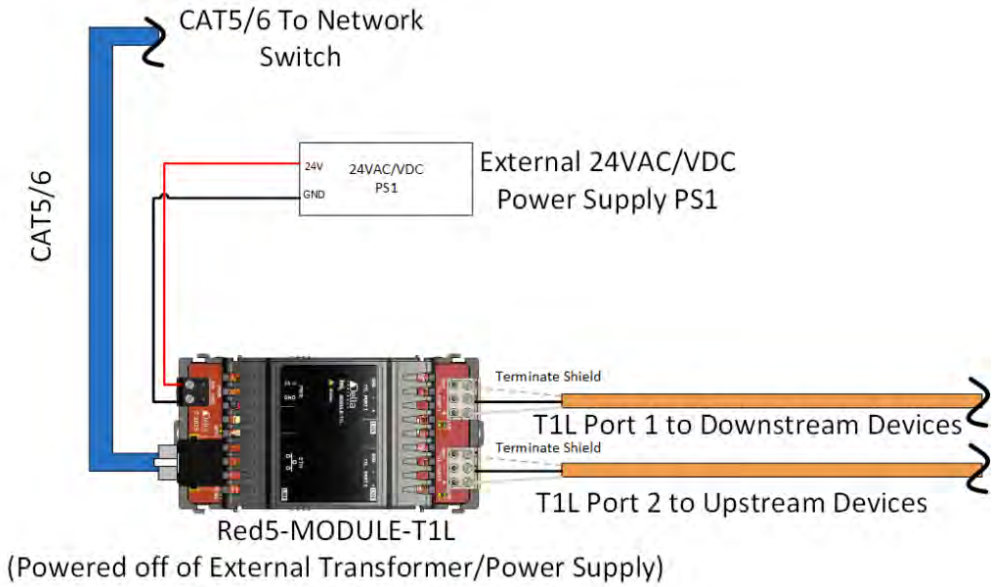

Daisy Chain Topology

MS/TP networks are daisy-chained at each port. This means that the cables are tied into a single terminal block and the signal is not rebuilt. The network cable is essentially one long line (hence stars and Ts are not supported as the signal is halved at each branch). Rarely would an MS/TP network be more than a

Copyright © Delta Intelligent Building Technologies (Canada) Inc.

100-200ft between each mode and typically, the distance between 2 nodes would not be more than 50ft.

The T1L daisy-chain topology supports up to 64 devices.

The maximum distance between 2 Red5 T1L devices is dependent on wire gauge and wire quality.

Status Indicators

LED	Function	Color	Description
Status	Device status indicator	Off	There is no input power
		Solid green	The device is operating normally
		Solid red	The device is starting up or in fault

FAQs

How do ports independently gauge speed? (i.e., if one port is 100Mb/s, the other is 10Mb/s)

The CAT5/6 side of the converter will operate as required between 10-100Mb/s. The T1L side of the converter operates at a maximum of 10Mb/s.

Can I add a converter to my existing MS/TP network?

You can re-use existing MS/TP cable, however you cannot mix MS/TP and T1L devices on the same physical topology. You must remove any Ts or stars in the network topology. Ensure that polarity is observed. The CON-T1L can only be added to an Ethernet/IP based controller.

Open Source Licensing

This product includes software developed by the OpenSSL Project for use in the OpenSSL Toolkit (http://www.openssl.org). For a complete list of open source components used in this product, see the Open Source and Third Party Components document.

The software included in this product contains copyrighted software that is licensed under the GNU General Public License (GPL) and the GNU Lesser General Public License (LGPL). Copies of these licenses are available on the GNU website:

GPL License	LGPL License
http://www.gnu.org/licenses/gpl-3.0.html http://www.gnu.org/licenses/old-licenses/gpl-2.0.html	http://www.gnu.org/licenses/lgpl.html http://www.gnu.org/licenses/old-licenses/lgpl-2.1.html

You may obtain the complete corresponding source code from Delta Intelligent Building Technologies for a period of three years after our last shipment of this product by sending a money order or check for $5 to:

Delta Intelligent Building Technologies (Canada) Inc.
Product Development Department
17850 56 Avenue
Surrey, British Columbia, Canada V3S 1C7

Please write the model and serial number of the product in the memo line of your payment. This offer is valid to anyone in receipt of this information.

Wiring and Installation Guidelines

Delta Controls

Copyright Information

No part of this document may be reproduced, transmitted, transcribed, stored in a retrieval system or translated into any language (natural or computer), in any form or by any means, without the prior written permission of Delta Controls Inc.

Limited permission is granted to reproduce documents released in Adobe Portable Document Format(PDF) electronic format in paper format. Documents released in PDF electronic format may be printed by end users for their own use using a printer such as an inkjet or laser device. Authorized distributors of Delta Controls Inc. products (Delta Partners) may print PDF documents for their own internal use or for use by their customers. Authorized Delta Partners may produce copies of released PDF documents with the prior written permission of Delta Controls Inc.

Information in this document is subject to change without notice and does not represent a commitment to past versions of this document on the part of Delta Controls Inc. Copyright ©2025 Delta Controls Inc. All rights reserved

Table of Contents

1. Power Wiring
    1. Power Supply Specifications
    2. Wire Specifications
    3. Transformer Specifications
    4. Power Supply Types
        1. Half-Wave Rectification
        2. Full-Wave Rectification
        3. Identifying the Power Supply Type
    5. Wiring Half-Wave Rectified Devices
    6. Wiring Full-Wave Rectified Devices
    7. Wiring Direct Current Devices
    8. Grounding
        1. Grounding enteliBUS Components in the Same Enclosure
        2. Grounded Distributed enteliBUS Components
        3. Grounding Red5 ROOM Devices
    9. Fusing
    10. Multiple Service Entrances
        1. Identifying Multiple Service Entrances
        2. Ground Isolation
    11. Power over Ethernet
2. Input and Output Wiring
    1. Inputs
        1. Input Wiring Practices and Precautions
        2. Powering Sensors
        3. 10 kΩ / Dry Contact Input
        4. 5 V Input
        5. 10 V Input
        6. 4-20 mA Input
        7. Digital-Only Input
        8. RTD Input
    2. Outputs
        1. Analog 0–10 VDC Output
        2. Analog 0–20 mA Output
        3. Binary TRIAC Output
        4. TRIAC Leakage and Load Current Considerations
        5. Binary SSR Output
        6. Binary FET Output
        7. Binary Relay Output
        8. Wiring Internal/External Power Jumpers for Binary Outputs
3. T1L Guidelines
    1. Termination
    2. Retrofit Requirements
4. Ethernet Network Installation
    1. Communications Devices

Copyright © Delta Intelligent Building Technologies (Canada) Inc.

        1. Switch
        2. Hub
        3. Router
    2. Interfacing to High-Speed Ethernet Networks
    3. 10/100Base-T Specifications
    4. 10/100Base-T Cable Wiring
    5. Power over Ethernet (PoE)
5. RS-485 Network Installation
    1. Cable Type
    2. Network Configuration
    3. Maximum RS-485 Network Cable Length
    4. Maximum Number of Nodes
    5. Shield Continuity and Termination
        1. Ensuring Shield Continuity
        2. Terminating the Shield
    6. Network Data Wires End-of-Line Termination
        1. Using Two TRM-768s
        2. Using One TRM-768 and Built-In Termination
    7. Twisted Pair and Three-Wire Isolated Devices
        1. Twisted Pair Cable
        2. Three Conductor Cable
        3. Extending Twisted Pair Cable with Three Conductor Cable
    8. Repeaters
        1. Differences between Rev 1.1 and Rev 1.2 DZNR-768 Repeater
        2. Using a DZNR-768 Rev 1.2 Repeater with Twisted Pair Network
        3. Using Repeaters Incorrectly
    9. Running RS-485 between buildings or electrical services
    10. Transients and RS-485 Transceiver Failure
    11. LINKnet Networks
6. enteliBUS Network Installation
    1. Cable Type
    2. Network Configuration
    3. Maximum Network Length
    4. Maximum Number of enteliBUS Backplanes
    5. Shield Continuity and Termination
        1. Ensuring Shield Continuity
        2. Terminating the Shield
    6. Network Data Wires Termination
    7. Repeaters
    8. Running the eBUS Network between Buildings
    9. Running the eBUS Network between Electrical Services
7. Red5BUS Network Installation
    1. Cable Type
    2. Network Configuration
    3. Maximum Network Length
    4. Shield Continuity and Termination
        1. Ensuring Shield Continuity
        2. Terminating the Shield
    5. Network Data Wires Termination

Copyright © Delta Intelligent Building Technologies (Canada) Inc.

1. Terminating the Red5BUS Network at the Controller
2. Terminating the Red5BUS Network at the O3-HUB
3. Terminating the Red5BUS Network at the Red5-EXPAND-04

8. Glossary

This document describes recommended wiring and network installation practices for Delta Controls products.

Table of Contents

- Power Wiring
  - Power Supply Specifications
  - Wire Specifications
  - Transformer Specifications
  - Power Supply Types
    - Half-Wave Rectification
    - Full-Wave Rectification
    - Identifying the Power Supply Type
  - Wiring Half-Wave Rectified Devices
  - Wiring Full-Wave Rectified Devices
  - Wiring Direct Current Devices
  - Grounding
    - Grounding enteliBUS Components in the Same Enclosure
    - Grounded Distributed enteliBUS Components
    - Grounding Red5 ROOM Devices
  - Fusing
  - Multiple Service Entrances
    - Identifying Multiple Service Entrances
    - Ground Isolation
  - Power over Ethernet
- Input and Output Wiring
  - Inputs
    - Input Wiring Practices and Precautions
    - Powering Sensors
    - 10 kΩ / Dry Contact Input
    - 5 V Input
    - 10 V Input
    - 4-20 mA Input
    - Digital-Only Input
    - RTD Input
  - Outputs
    - Analog 0–10 VDC Output
    - Analog 0–20 mA Output
    - Binary TRIAC Output
    - TRIAC Leakage and Load Current Considerations
    - Binary SSR Output
    - Binary FET Output
    - Binary Relay Output
    - Wiring Internal/External Power Jumpers for Binary Outputs
- T1L Guidelines
  - Termination
  - Retrofit Requirements
- Ethernet Network Installation

Copyright © Delta Intelligent Building Technologies (Canada) Inc.

    - Communications Devices
        - Switch
        - Hub
        - Router
    - Interfacing to High-Speed Ethernet Networks
    - 10/100Base-T Specifications
    - 10/100Base-T Cable Wiring
    - Power over Ethernet (PoE)
- RS-485 Network Installation
    - Cable Type
    - Network Configuration
    - Maximum RS-485 Network Cable Length
    - Maximum Number of Nodes
    - Shield Continuity and Termination
        - Ensuring Shield Continuity
        - Terminating the Shield
    - Network Data Wires End-of-Line Termination
        - Using Two TRM-768s
        - Using One TRM-768 and Built-In Termination
    - Twisted Pair and Three-Wire Isolated Devices
        - Twisted Pair Cable
        - Three Conductor Cable
        - Extending Twisted Pair Cable with Three Conductor Cable
    - Repeaters
        - Differences between Rev 1.1 and Rev 1.2 DZNR-768 Repeater
        - Using a DZNR-768 Rev 1.2 Repeater with Twisted Pair Network
        - Using Repeaters Incorrectly
    - Running RS-485 between buildings or electrical services
    - Transients and RS-485 Transceiver Failure
    - LINKnet Networks
- enteliBUS Network Installation
    - Cable Type
    - Network Configuration
    - Maximum Network Length
    - Maximum Number of enteliBUS Backplanes
    - Shield Continuity and Termination
        - Ensuring Shield Continuity
        - Terminating the Shield
    - Network Data Wires Termination
    - Repeaters
    - Running the eBUS Network between Buildings
    - Running the eBUS Network between Electrical Services
- Red5BUS Network Installation
    - Cable Type
    - Network Configuration
    - Maximum Network Length
    - Shield Continuity and Termination
        - Ensuring Shield Continuity
        - Terminating the Shield

Copyright © Delta Intelligent Building Technologies (Canada) Inc.

    - Network Data Wires Termination
        - Terminating the Red5BUS Network at the Controller
        - Terminating the Red5BUS Network at the O3-HUB
        - Terminating the Red5BUS Network at the Red5-EXPAND-04
- Glossary

Power Wiring

This section describes power wiring practices for all Delta Controls Class 2 products. For details about a specific product, see the product's installation guide.

> **NOTE:** This document does not describe line voltage wiring practices.

Power Supply Specifications

Category	Specification
Voltage	20-28 VAC
Electrical class	Class 2 100 VA max
Fuse rating	See Table 6 for correct fuse size

Table 1: AC Power Supply Specifications

Category	Specification
Voltage	20-28 VDC
Electrical class	Class 2 100 VA max

Table 2: DC Power Supply Specifications

A typical 100 VA transformer only provides 40 W to 60 W (depending on loading) of usable power when powering half-wave rectified devices. With a DC power supply, all of its output is usable power. This means a 100 W rated DC power supply can power roughly twice the number of field devices compared to a 100 VA transformer. This is one of the reasons that DC power is often perceived as being more expensive than AC power. For an apples-to-apples comparison, a 100 VA transformer should be compared against a 60 W DC power supply, not a 100 W supply.

Wire Specifications

Delta Controls products require dedicated two-conductor stranded copper wire for device power. For 24 VAC power wire selection, see Table 3 below. Wire gauge depends on the VA rating for the device and the length of the wire used. If multiple devices use the same transformer, add the VA ratings of all the devices together and use the wire distance to the furthest device to determine wire selection.

Copyright © Delta Intelligent Building Technologies (Canada) Inc.

Load	18 AWG (1.0 mm^2)	16 AWG (1.5 mm^2)
5 VA	1000 ft (300 m)	–
15 VA	500 ft (150 m)	–
25 VA	300 ft (90 m)	500 ft (150 m)
50 VA	150 ft (45 m)	250 ft (75 m)
75 VA	–	150 ft (45 m)
100 VA	–	100 ft (30 m)

Table 3: 24 VAC Power Wire Selection

For 24 VDC power wire selection, see Table 4 below, which provides maximum wire distances based on the DC resistance of various wire gauges.

Load	22 AWG (0.5 mm^2)	20 AWG (0.75 mm^2)	18 AWG (1.0 mm^2)	16 AWG (1.5 mm^2)	14 AWG (2.5 mm^2)
5 W	713 ft (218 m)	1134 ft (347 m)	1804 ft (551 m)	2868 ft (872 m)	4562 ft (1391 m)
15 W	237 ft (72 m)	378 ft (115 m)	601 ft (183 m)	956 ft (290 m)	1520 ft (463 m)
25 W	142 ft (43 m)	227 ft (69 m)	360 ft (110 m)	573 ft (174 m)	912 ft (278 m)
50 W	71 ft (21 m)	113 ft (34 m)	180 ft (55 m)	286 ft (87 m)	456 ft (139 m)
75 W	47 ft (14 m)	75 ft (23 m)	120 ft (36 m)	191 ft (58 m)	304 ft (92 m)
100 W	35 ft (11 m)	56 ft (17 m)	90 ft (27 m)	143 ft (44 m)	228 ft (69 m)

Table 4: 24 VDC Power Wire Selection

Transformer Specifications

Transformers must be UL Listed, 24 VAC, and rated to Class 2. Recommended transformers are listed in Table 5.

A single hub transformer has all its wires coming out the same side. A dual hub transformer has primary wires coming out the primary side and secondary wires coming out the secondary side.

Part #	Primary Voltage	VA Rating	Hubs	Circuit Breaker	Approvals
440000	120 VAC	40 VA	2	No	UL Listed CSA Approved Class 2

Copyright © Delta Intelligent Building Technologies (Canada) Inc.

Part #	Primary Voltage	VA Rating	Hubs	Circuit Breaker	Approvals
440001	120 VAC	40 VA	1	No	UL Recognized Class 2
440002	120 VAC	50 VA	2	No	UL Listed CSA Approved Class 2
440003	120 VAC	50 VA	1	No	UL Recognized Class 2
440004	277 VAC	50 VA	2	No	UL Listed CSA Approved Class 2
440005	277 VAC	50 VA	1	No	UL Recognized Class 2
440006	120 VAC	75 VA	2	Yes	UL Listed CSA Approved Class 2
440007	120 VAC	75 VA	1	Yes	UL Recognized Class 2
440008	120 VAC	96 VA	2	Yes	UL Listed CSA Approved Class 2
440009	120 VAC	96 VA	1	Yes	UL Recognized Class 2
440010	120 VAC	150 VA	1	Yes	UL Listed CSA Approved Class 2
440011	120, 208, 240, 480 VAC	50 VA	1	Yes	UL Listed CSA Approved Class 2
440012	120, 208, 240, 480 VAC	75 VA	1	Yes	UL Listed CSA Approved Class 2
440013	120, 208, 240, 480 VAC	96 VA	1	Yes	UL Listed CSA Approved Class 2

Table 5: Recommended Transformers

Copyright © Delta Intelligent Building Technologies (Canada) Inc.

Power Supply Types

The type of power supply used on a device affects the way you wire power to the device. Delta Controls products use three types of power supplies: half wave rectified, full wave rectified, and direct current.

Half-Wave Rectification

A half-wave rectified signal draws current from the positive voltage cycle only. Because of this, devices that use half-wave rectification have ground-referenced power circuitry. All half-wave devices share a common ground.

Full-Wave Rectification

Also known as bridge rectified, a full-wave rectified signal draws current from both the positive and negative voltage cycles. Full-wave devices have floating power supplies and are not referenced to ground.

Identifying the Power Supply Type

It is essential to identify whether the device's power supply is half-wave rectified, full-wave rectified, or direct current before wiring power to it. Failure to identify the power supply type correctly can result in damage to the device and the transformer.

To identify the type of power supply that a Delta Controls device uses, see the product installation guide. Figure 1 shows typical power ports and controller labeling.

Figure 1: Typical Half-Wave Rectified, Full-Wave Rectified, and DC Power Ports

Wiring Half-Wave Rectified Devices

CAUTION: Multiple half-wave devices can be wired to the same transformer provided that wire polarity is followed. Crossing wires between panels can quickly damage devices and transformers.

Wire the transformer's X1 lead to the device power port's 24 VAC terminal and wire the transformer's X2 lead to the device power port's GND terminal, as shown in Figure 2.

Copyright © Delta Intelligent Building Technologies (Canada) Inc.

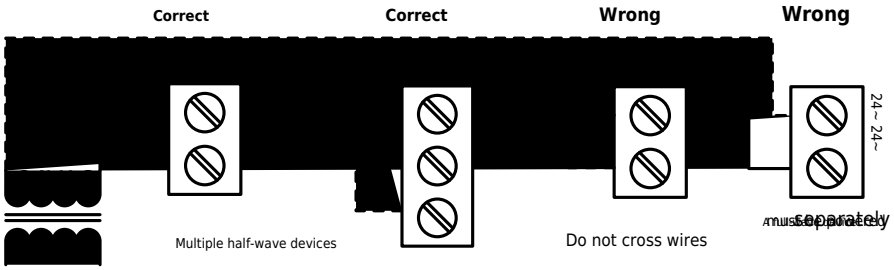

Figure 2: Wiring Half-Wave Rectified Devices

Wiring Full-Wave Rectified Devices

CAUTION: Full-wave devices must not be wired to the same transformer to which a half-wave device is connected. Each full-wave device must use a dedicated transformer. Otherwise, a ground loop can occur that damages devices and transformers.

Do not ground the transformer of a full-wave device. Connect the transformer directly to the power port as shown in Figure 3.

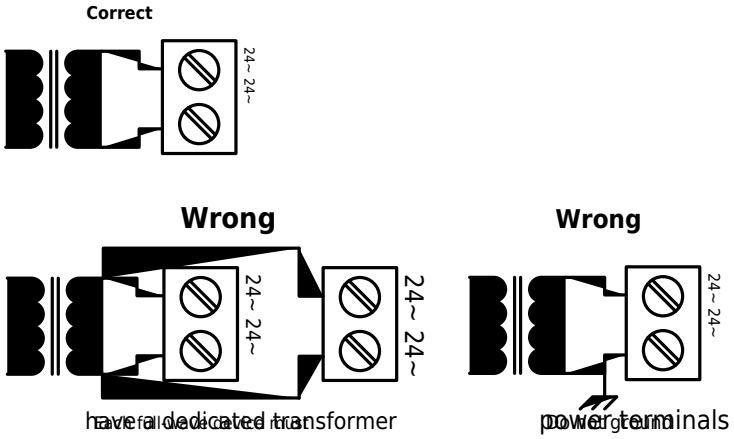

Figure 3: Wiring Full-Wave Rectified Devices

Wiring Direct Current Devices

Ground all devices in the same circuit in one place only at the direct current power supply.

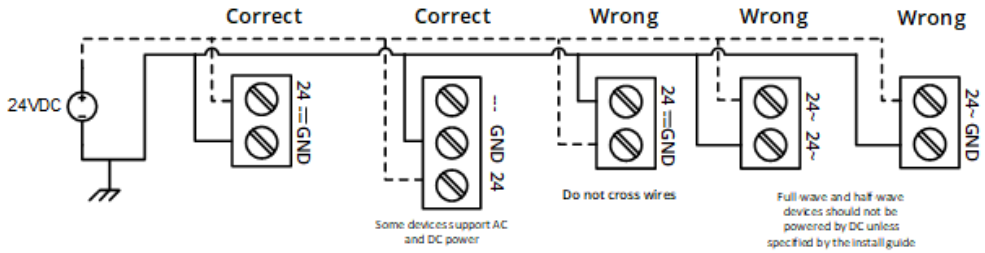

Figure 4: Wiring Direct Current Devices

Grounding

Regardless of power supply type, all terminals labeled GND must be connected to earth ground. Proper grounding prevents many potential problems that can occur in a network of devices. Common symptoms of a poorly grounded network include inconsistent RS-485 communications and damage from voltage spikes.

When the device contains a ground lug, connect the ground lug to earth ground. If the device does not contain a ground lug, then connect any one of the terminals labeled GND to earth ground.

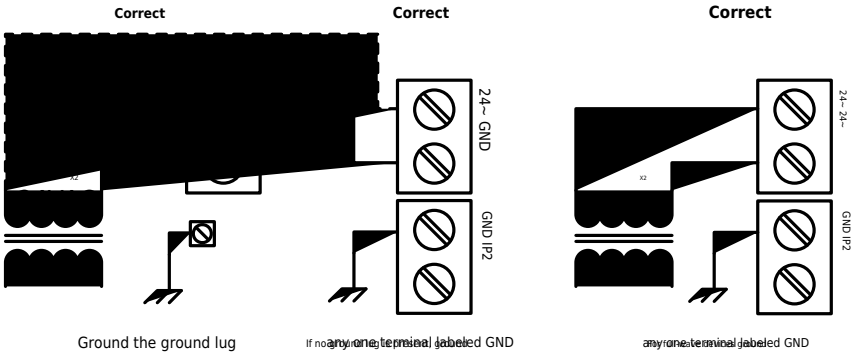

Figure 5: Correct Device Grounding

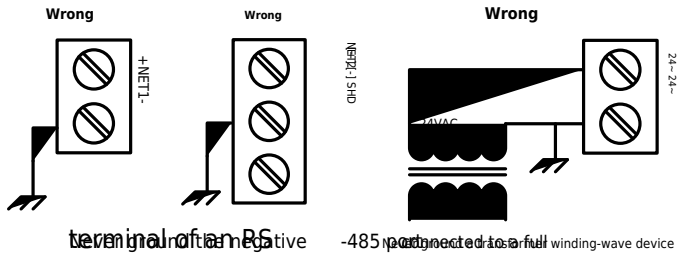

Figure 6: Incorrect Device Grounding

CAUTION: Never ground one of the transformer’s secondary wires when connected to a full-

wave device. Doing so will damage both the device and the transformer.

If grounding each device is impractical, such as with a network of BACstats, then a single ground point may be used. The most common place to ground in this manner is one of the secondary wires of the power transformer. The ground is passed internally through the properly grounded controller to all devices in the network.

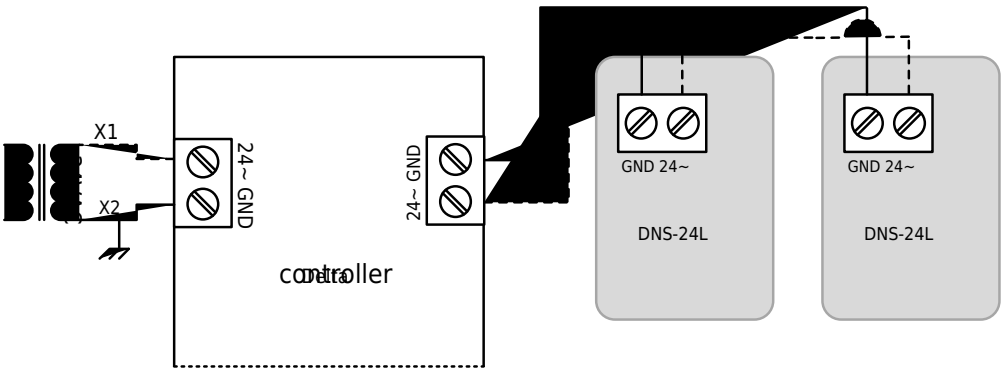

Figure 7: Single Ground Point – LINKnet Devices

Grounding enteliBUS Components in the Same Enclosure

When all enteliBUS components are in the same enclosure connect the power port GND on the automation engine and on each expander to the same earth ground, as shown in Figure 8. This recommendation applies when the components are connected by their integrated eBUS network connectors and when connected by eBUS network cable.

I/O modules are grounded properly via the backplane they are plugged into.

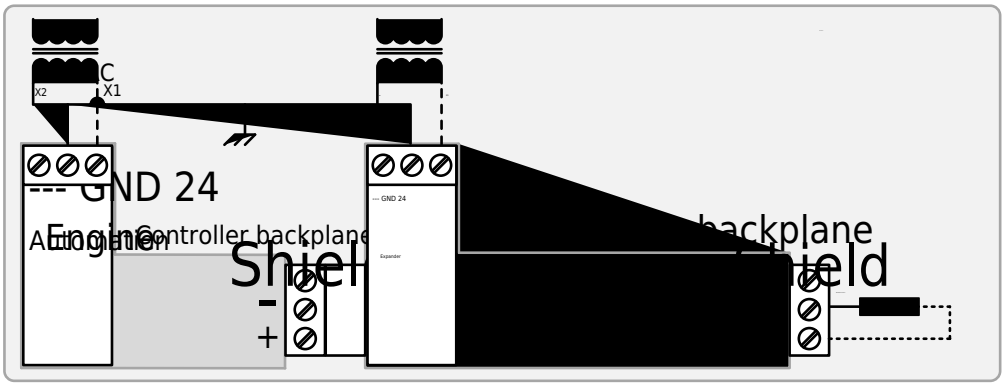

Figure 8: Grounding enteliBUS Components in the Same Enclosure

Grounded Distributed enteliBUS Components

When enteliBUS components are distributed (within the limitations of the eBUS network) and not in the same enclosure, connect the power port GND on the automation engine and on each expander to a local earth ground, as shown in Figure 9.

Copyright © Delta Intelligent Building Technologies (Canada) Inc.

I/O modules are grounded properly via the backplane they are plugged into.

CAUTION: Power for all components must be supplied from the same electrical service. All local earth grounds must be supplied from the same electrical service.

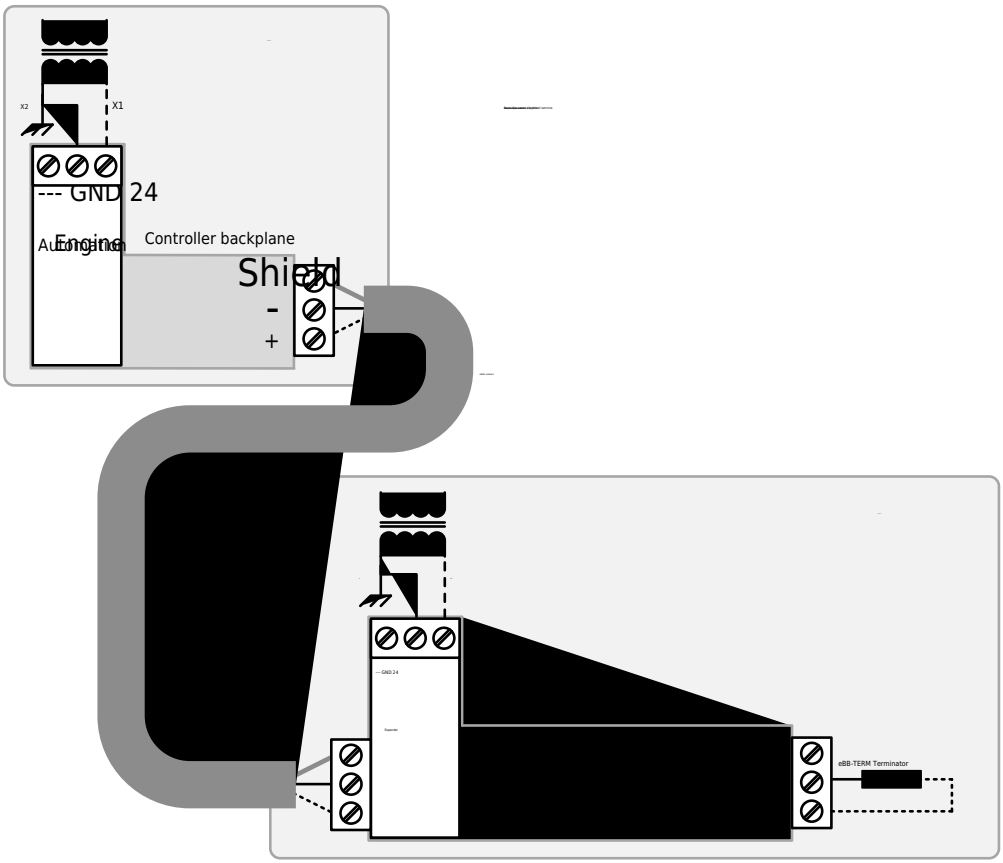

Figure 9: Grounding Distributed enteliBUS Components

Grounding Red5 ROOM Devices

Connect the power port PWR IN GND on the Red5 ROOM controller to earth ground, as shown in Figure 10.

The modules attached to the controller are grounded properly when connected to the controller.

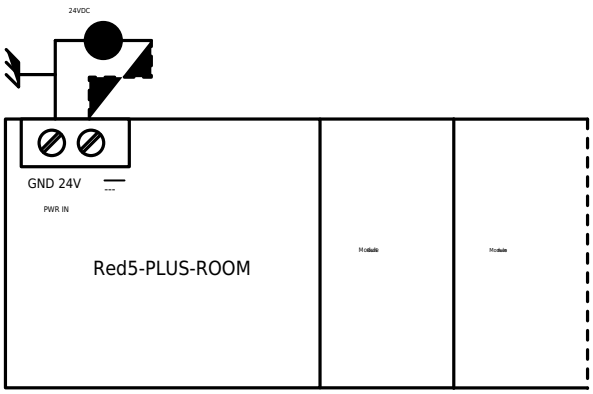

Copyright © Delta Intelligent Building Technologies (Canada) Inc.

Figure 10: Grounding Red5-ROOM Devices

Fusing

When a transformer does not have a built-in circuit breaker, we recommend using a slow-blow fuse on the secondary side of the transformer. A fuse not only provides protection for the transformer but can also help with troubleshooting. The fuse size is determined by the VA ratings of the devices. Use Table 6 to determine the correct fuse size.

Transformer Rating	Fuse Size
100 VA	4 A
75 VA	3 A
50 VA	2 A
25 VA	1A

Table 6: Correct Fuse Sizes

Without a fuse, the only protection a Class 2 circuit has is the primary circuit breaker (normally 15 A or 20 A). If a device were to fail, this circuit breaker is not sufficient protection to prevent damage to the transformer. A fuse on the transformer's secondary prevents damage to the device.

Delta Controls Class 2 products have a maximum rating of 100 VA. This means that the maximum allowable fuse size is 4 A.

Fuse one secondary transformer wire only. For half-wave devices, fuse the wire connected to the device's 24~ pin. For full-wave devices, either wire can be fused.

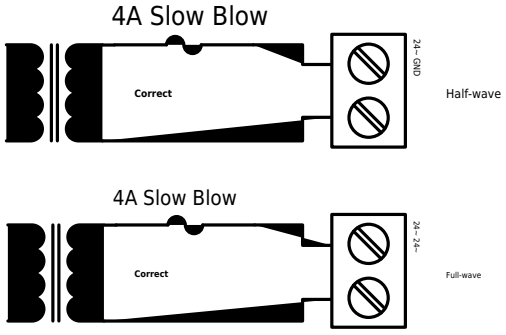

Figure 11: Using 4 A Slow Blow Fuse

Copyright © Delta Intelligent Building Technologies (Canada) Inc.

Multiple Service Entrances

A service entrance is a location where the electrical service enters the building. Multiple services are common in large installations or in installations where multiple buildings are on the same network.

Identifying Multiple Service Entrances

To identify whether or not the location uses multiple services, check for the following:

- If there is more than one electrical room that contains a primary transformer, then there are multiple service entrances.
- If the building has had a large addition to the original structure, then it likely has another service entrance.

If there is any question as to whether or not there are multiple service entrances, obtain and check a wiring diagram for the building.

Ground Isolation

Never tie grounds from multiple services together. Ground voltage differences across multiple services can be quite high. During lightning storms, potential differences can reach hundreds, even thousands, of volts.

Treat multiple services as separate sites. Never connect power, I/O, or network wiring directly across multiple services.

See Running RS-485 between Buildings for more information about network and power isolation.

Power over Ethernet

Delta Controls PoE devices, including 802.3af-2003 (“PoE”) and 802.3at-2009 (“PoE+”) compliant devices, receive power from PSE (power sourcing equipment), which can be either a PoE network switch or a midspan power injector. Power is delivered over the same Cat5e/Cat6 cable that is used for Ethernet communications. No external control transformer is required. **Do not apply 24 VAC these devices**.

Delta Controls PoE devices have an on-board power supply that converts the PoE power to 24 VDC, which powers the device and provides a limited amount of 24 VDC power for external field devices.

For an installation to be compliant with the 802.3af and 802.3at standards, there are specifications for PSE output voltage, power, cable type, and cable length. These are shown in the following table.

Copyright © Delta Intelligent Building Technologies (Canada) Inc.

Specification	802.3af (802.3at Type 1) “PoE”	802.3at Type 2 “PoE+”
Power available at device	12.95 W	25.50 W
Max power delivered by PSE	15.40 W	30.0 W
Voltage range at PSE	44.0 to 57.0 VDC	50.0 to 57.0 VDC
Voltage range at device	37.0 to 57.0 VDC	42.5 to 57.0 VDC
Max cable length	330 ft (100 m)	330 ft (100 m)
Max cable resistance	20 Ω	12.5 Ω

Table 7: PoE Electrical Specifications

Delta Controls PoE devices work with all PSEs that comply with the electrical specifications in Table 7.

Input and Output Wiring

Inputs

Delta Controls controllers provide six types of industry-standard inputs, compatible with most sensors available on the market:

- Universal input that can be configured for:
  - 10 kΩ / dry contact
  - 5 V
  - 10 V
  - 4–20 mA
- Digital-only input
- RTD (resistance temperature detector) input

Input Wiring Practices and Precautions

Although Delta Controls controllers’ inputs are very robust, following the wiring practices and precautions described in this document can further improve input accuracy and reliability.

Powering Sensors

Some sensors need to receive power for proper operation. This power can be supplied from a 24 VAC Class 2 transformer or from a power supply that converts the transformer voltage into a more usable 24 VDC.

We recommend that the sensor power be supplied from a source that is separate from the controller's power source for two important reasons:

- When 24 VDC is required, you don't need to be concerned whether the DC converter is half-wave or full-wave rectified to match the controller's power requirement.
- Controller power is not affected by electrical problems associated with the sensor. You may lose a sensor, but the controller continues to function.

Wire the sensor power supply input according to the manufacturer's instructions.

10 kΩ / Dry Contact Input

Delta Controls 10 kΩ inputs are typically used for a 10 kΩ thermistor or a dry contact, such as a push button or switch. Internally to the controller, the input is connected to a 10 kΩ pull-up resistor. A resistance value of 10 kΩ wired to the input translates to a reading of 50% in the Analog Input object. An open circuit reads 100% and a short circuit reads 0%.

Category	Specification
Full scale value	Open circuit (∞ ohm) = 100%
Half scale value	10 kΩ = 50%
Input impedance	10 kΩ
Cable type	2-conductor 22 AWG (0.5 mm^2) (Belden 88442) 2-conductor 18 AWG (1.0 mm^2) (Belden 8461NH)
Max cable length	1500 ft (450 m) max using 22 AWG (0.5 mm^2) 3900 ft (1200 m) max using 18 AWG (1.0 mm^2)
Wiring precautions	Ground only at controller input GND terminal

Table 8: 10 kΩ / Dry Contact Input Specifications

Proper grounding increases sensor reliability and accuracy. Proper grounding eliminates any ground noise effect and any potential differences that could develop during electrical storms. Figure 12 illustrates this.

Copyright © Delta Intelligent Building Technologies (Canada) Inc.

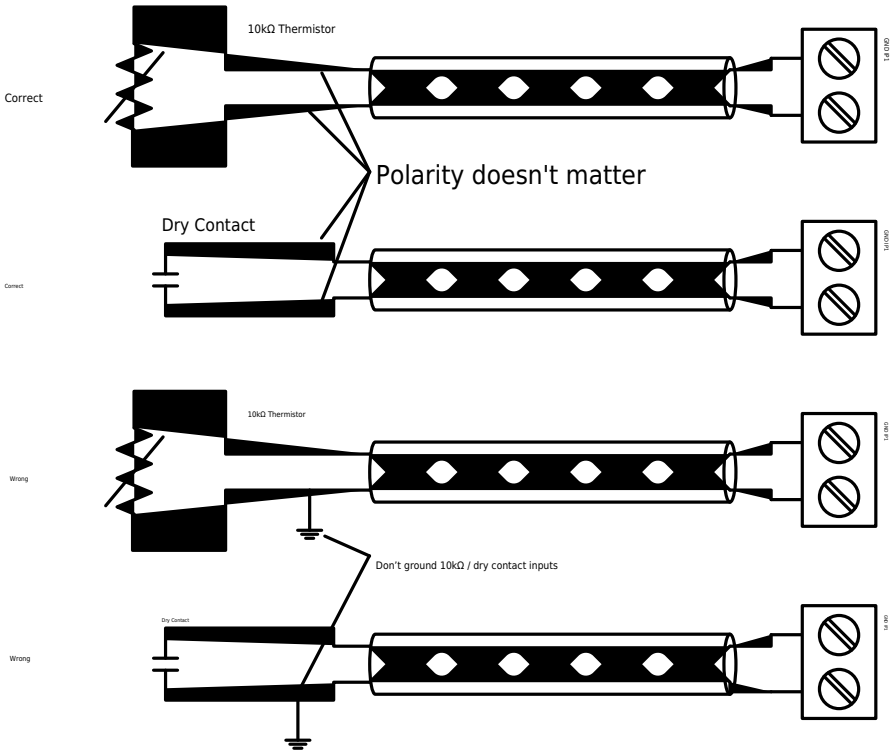

Figure 12: Wiring 10 kΩ / Dry Contact Inputs

5 V Input

The 5 V input on Delta Controls controllers is a high input impedance input. Use a 5 V input with active devices that generate their signal source. The 5 V input's high input impedance makes it suitable for current transformers and other sensors that have high output impedance.

Category	Specification
Full scale voltage	5 VDC
Maximum voltage	20 VDC (higher voltages may damage input circuit)
Input impedance	> 1 MΩ
Cable types	2-conductor 22 AWG (0.5 mm^2) shielded (Belden 83552) 2-conductor 20 AWG (0.75 mm^2) shielded (Belden 83602) 3-conductor 20 AWG (0.75 mm^2) shielded (Belden 8772)
Max cable length	100 ft (30 m) 330 ft (100 m) with 20 kΩ load resistor
Wiring precautions	Keep cable short Use dedicated shielded cable

Table 9: 5 V Input Specifications

While the input's high impedance characteristics can be advantageous for monitoring some sensors, the current flow from the sensor to the controller is low, making the signal very susceptible to noise.

Copyright © Delta Intelligent Building Technologies (Canada) Inc.

We strongly recommend using shielded wire for all 5 V inputs. We also recommend using a dedicated cable because adjacent wires in the same cable can induce noise into the signal. A dedicated shielded cable protects the signal from outside noise sources.

CAUTION: When using shielded wire, earth ground the controller end of the shield only. When you ground both ends, difference in ground potentials can induce noise into the signal.

When the sensor has low output impedance (less than 200 Ω), we recommend wiring a 20 kΩ resistor in parallel with the input. The 20 kΩ input impedance acts as a load for the sensor, increasing the current flow into the controller. The higher the current flow, the less susceptible the sensor is to external noise.

Keep the cable length as short as possible. Do not exceed the maximum shielded cable length of 100 ft (30 m) for all 5 V inputs. The addition of a 20 kΩ resistor at the controller allows for increased cable lengths of up to 330 ft (100 m). Signal quality degrades quickly with long cable runs. Ensure that the addition of the 20 kΩ does not significantly affect the signal level generated at the input device.

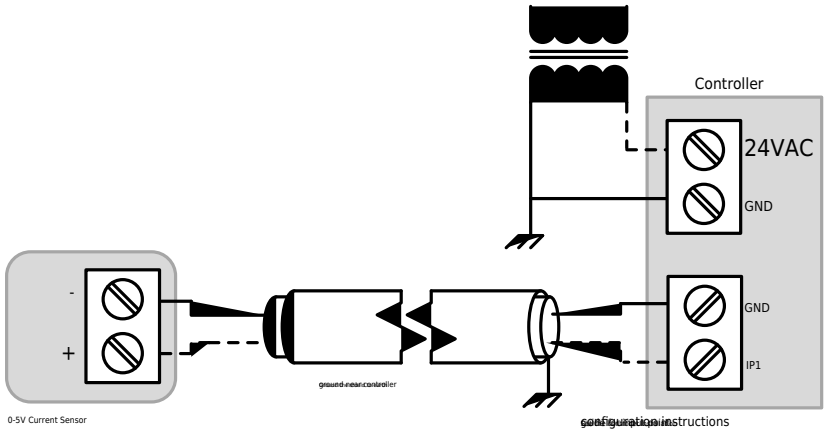

Figure 13: Wiring a 5 V Current Sensor

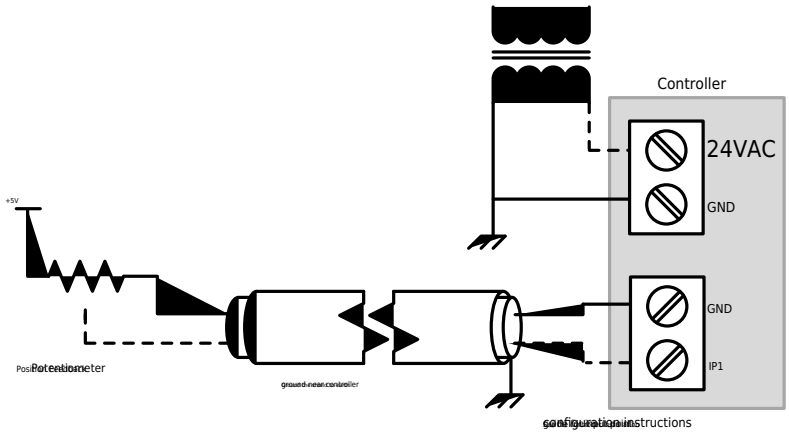

Figure 14: Wiring a 5 V Position Feedback Potentiometer

10 V Input

Delta Controls 10 volt inputs have a wide variety of applications including humidity and pressure sensors. 10 V inputs have moderate input impedance, making them less susceptible to noise than 5 V inputs.

Category	Specification
Full scale voltage	10 VDC
Maximum voltage	20 VDC (higher voltages may damage input circuit)
Input impedance	20 kΩ
Cable type	3-conductor 18 AWG (1.0 mm^2) unshielded (Belden 88870)
Max cable length	330 ft (100 m)

Table 10: 10 V Input Specifications

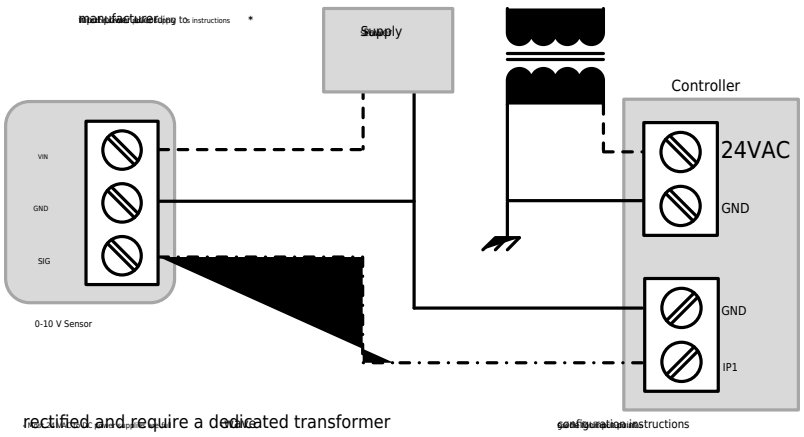

Figure 15: Wiring a 10 V Sensor

4-20 mA Input

4–20 mA inputs are used for a variety of sensors such as pressure sensors. 4–20 mA inputs are preferred over other input types because of the high current. The higher the current through a wire, the less susceptible it is to noise.

CAUTION: In controllers without an mA option, an external 250 Ω resistor must be wired in parallel across the input, with the input set to 0–5 V. Alternatively, a 500 Ω resistor can be used with the input set to 10 V.

Category	Specification
Full scale current	20 mA
Input impedance	250 Ω

Copyright © Delta Intelligent Building Technologies (Canada) Inc.

Category	Specification
Cable type	2-conductor 18 AWG (1.0 mm^2) unshielded (Belden 8461NH) 4-conductor 18 AWG (1.0 mm^2) unshielded (Belden 88489)
Max cable length	3300 ft (1000 m)

Table 11: 4-20 mA Input Specifications

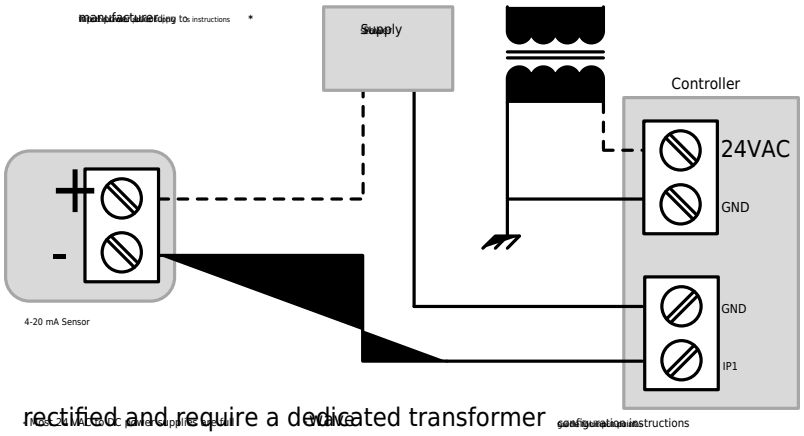

rectified and require a dedicated transformer

Figure 16: Wiring a 2-Wire 4-20 mA Sensor

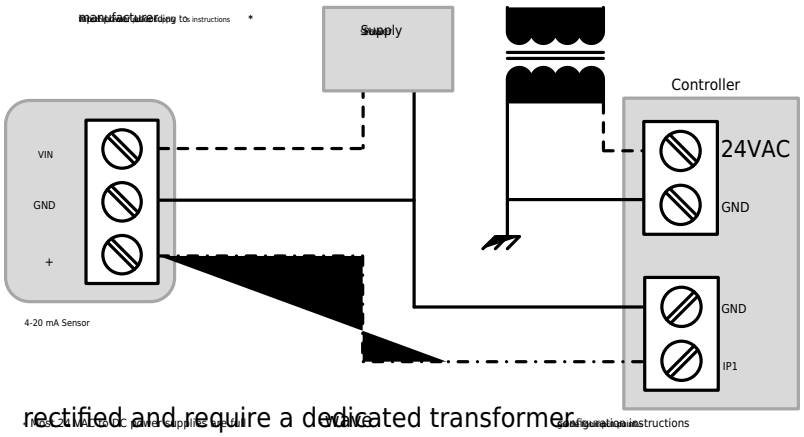

rectified and require a dedicated transformer.

Figure 17: Wiring a 3-Wire 4-20 mA Sensor

Digital-Only Input

Digital-only inputs are used to monitor dry contacts, push buttons and switches. The digital input described here is available on some enteliBUS modules.

Digital inputs can use either 24 VAC or 24 VDC. When a digital input is configured in software as direct acting, it switches off when voltage drops below a threshold of 5 VDC or 5 VAC and switches on when voltage rises above the threshold of 11 VDC or 18 VAC. When the voltage is between these thresholds, the input maintains its current state.

A 24 VDC-powered digital input satisfies the switching requirements for IEC 61131-2 Type 1 and Type 3

Copyright © Delta Intelligent Building Technologies (Canada) Inc.

switches. IEC 61131-2 Type 2 is not supported.

The digital input circuit includes hysteresis that provides noise immunity to minimize the detection of false transitions.

Category	Specification
Output current supplied	40 mA
Cable type	2-conductor 22 AWG (0.5 mm^2) (Belden 88442) 2-conductor 18 AWG (1.0 mm^2) (Belden 8461NH)
Max cable length	1500 ft (450 m) max using 22 AWG (0.5 mm^2) 3900 ft (1200 m) max using 18 AWG (1.0 mm^2)

Table 12: Digital Input Specifications

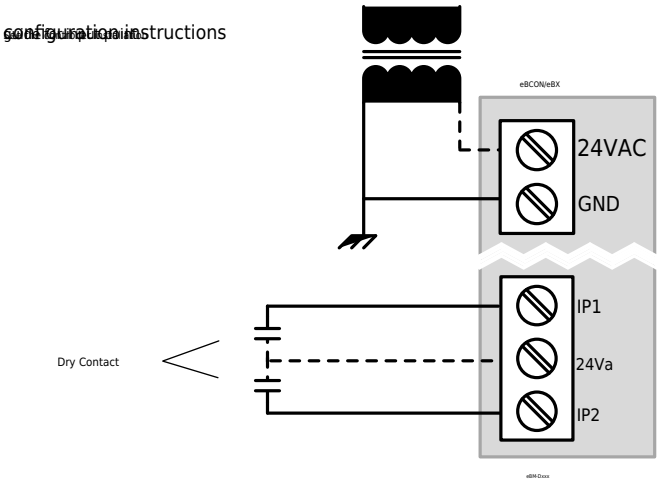

Figure 18: Wiring a Digital Input Dry Contact (Typical Method)

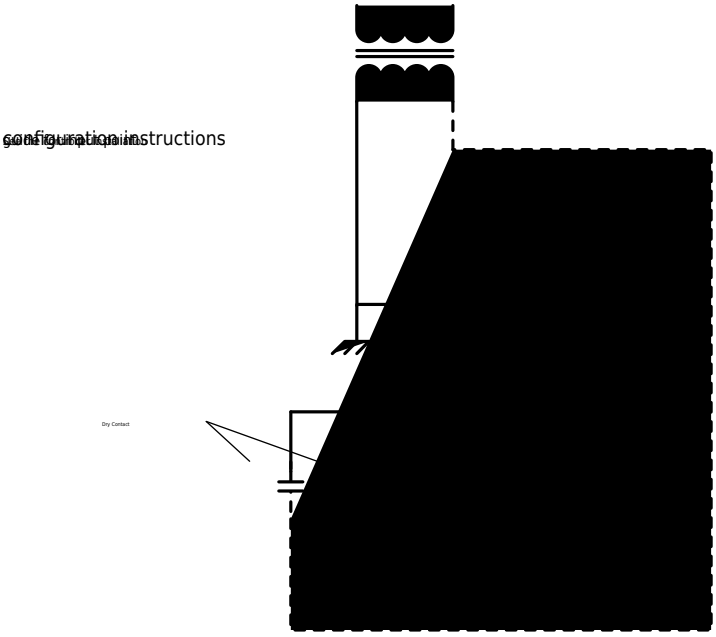

Figure 19: Wiring a Digital Input Dry Contact (Alternate Method)

RTD Input

RTD (resistance temperature detector) inputs are used to measure temperature over a wide range. The RTD input described here is available on some enteliBUS modules.

RTD inputs need to be calibrated to take into account the non-linearity of the sensor and the resistance of the connecting wire between the sensor and the controller.

See the eBM-R800-1K Installation Guide for details about supported sensors and calibration procedures.

Category	Specification
Resistance range	750 to 2210 Ω
Types	N1000, Ni1000 DIN, Pt1000 2-wire only
Cable type	2-conductor 22 AWG (0.5 mm^2) (Belden 88442) 2-conductor 18 AWG (1.0 mm^2) (Belden 8461NH)
Max cable length	No practical limit
Wiring precautions	Ground only at controller input GND terminal

Table 13: RTD Input Specifications

Proper grounding increases sensor reliability and accuracy. Proper grounding eliminates ground noise effect and potential differences that could develop during an electrical storm.

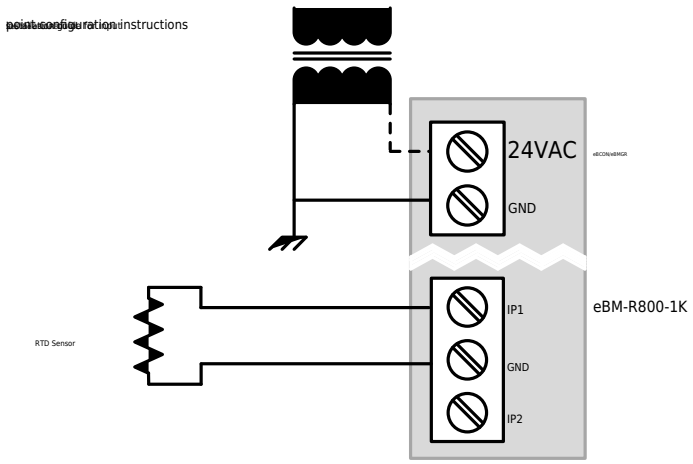

Figure 20: Wiring a RTD Input

Outputs

Delta Controls controllers provide five types of industry-standard outputs compatible with most actuators and relays available on the market:

- Analog: 0–10 VDC
- Analog: 0–20 mA
- Binary: TRIAC
- Binary: FET
- Binary: Relay

Analog 0–10 VDC Output

Delta Controls 0–10 VDC analog outputs can be used for a variety of DC voltage applications, including actuators, relays, and heat units.

Category	Specification
Full scale voltage	10 VDC
Max output current	20 mA (resistance greater than 500 Ω) 5 mA for eZ-440R4-230, eZP-440R4-230, eZV-440 and eZVP-440 (resistance greater than 2000 Ω)
Cable type	2-conductor 18 AWG (1.0 mm^2) unshielded (Belden 8461NH)
Max cable length	330 ft (100 m)

Table 14: 0-10 VDC Analog Output Specifications

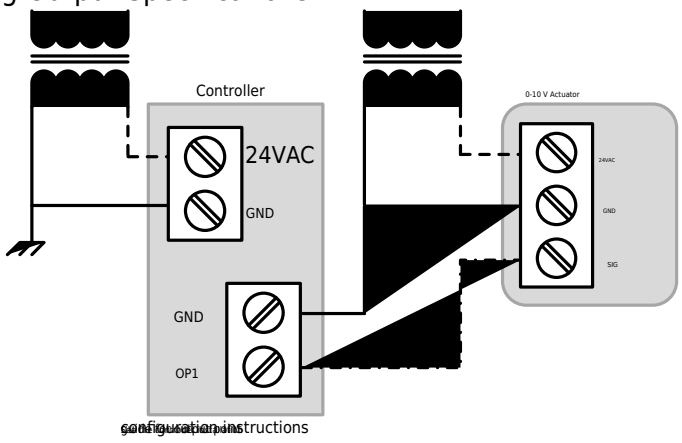

Figure 21: Wiring a 0-10 VDC Analog Output to 0-10 V Actuator

0–10 VDC analog outputs can also be used as binary outputs to provide 0 V or 10 V signals. This signal is useful for driving solid state and low power DC relays. Figure 22 shows an example of this application.

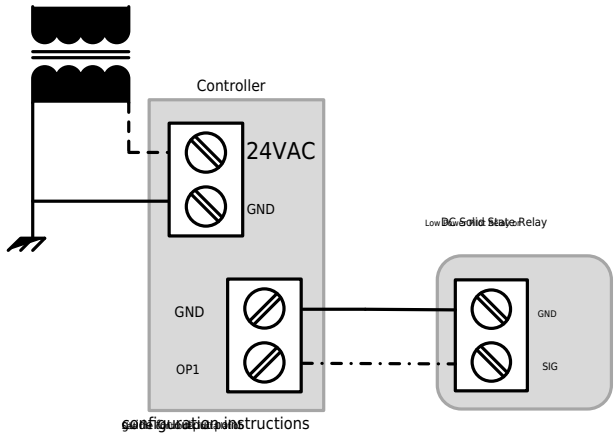

Figure 22: Wiring a 0-10 VDC Analog Output to Low Power Relay

Analog 0–20 mA Output

Delta Controls 0–20 mA analog outputs can be used for a variety of two-wire current loop control applications, including actuators and transducers.

The 0–20 mA analog output is configurable for 4–20 mA analog output to control a loop-powered device. The 0–20 mA analog output described here is available on the eBM-440I and eBM-440I-M enteliBUS modules.

Category	Specification
Full scale current	20 mA
Max load range	250–500 Ω at the end device
Cable type	2-conductor 18 AWG (1.0 mm^2) unshielded (Belden 8461NH)
Max cable length	Maximum cable length depends on the impedance of the end device. Use the following formula to calculate the maximum cable length for 2-conductor 18 AWG (1.0 mm^2) cable, where 1000 ft = 12.8 Ω (1000 m = 42 Ω), for both conductors. Feet: 1000 (500 – end device impedance) / 12.8 Meters: 1000 (500 – end device impedance) / 42

Table 15: 0-20 mA Analog Output Specifications

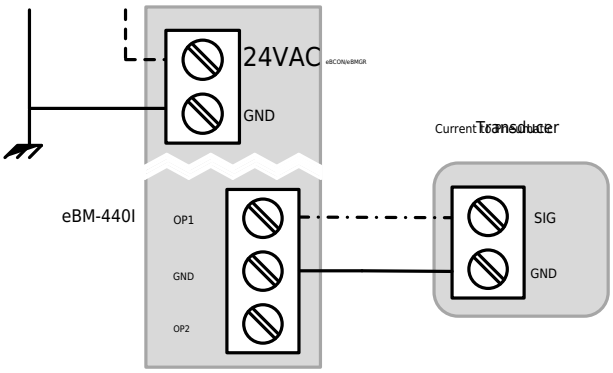

Figure 23: Wiring a 4-20 mA Analog Output to a Loop-Powered Transducer

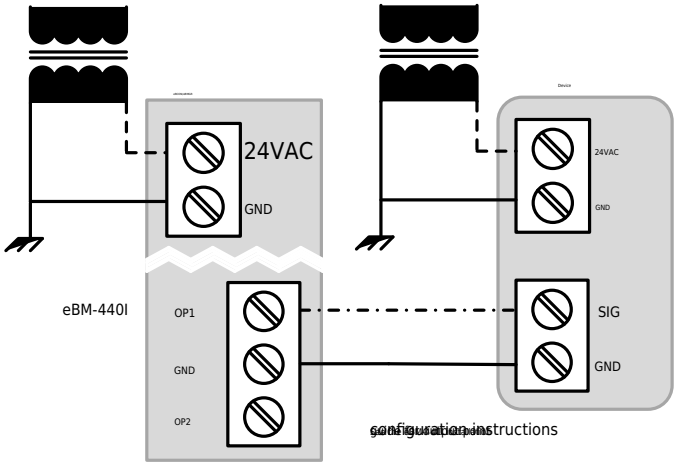

Figure 24: Wiring a 0-20 mA Analog Output to a Self-Powered Transducer

Binary TRIAC Output

Binary TRIAC (Triode for Alternating Current) outputs are used to provide switched 24 VAC at up to 500 mA to an output device. On some controllers, the AC power source for the outputs is jumper selectable for internal or external power. When using the external power setting, the maximum voltage that can be applied is 28 VAC. Never connect line voltage to a binary output.

enteliBUS modules with TRIAC or relay outputs include a PTC (Positive Temperature Coefficient) fuse on the internal power that supplies each pair of outputs. When too much current is drawn by the device connected to an output, the fuse opens, and power is removed from that pair of outputs.

Category	Specification
Max external voltage	28 VAC
Max output current	500 mA enteliBUS I/O modules: 500 mA when switching external power, 250 mA when switching internal controller-supplied power
Max leakage current	160 µA

Copyright © Delta Intelligent Building Technologies (Canada) Inc.

Category	Specification
Cable type	2-conductor 18 AWG (1.0 mm^2) unshielded (Belden 8461NH)
Max cable length	330 ft (100 m)
Minimum turn-on current	25 mA

Table 16: Binary TRIAC Output Specifications

CAUTION: Binary outputs are not meant to switch line voltage. Never connect line voltage to a binary output. Doing so will damage the controller.

When using the external power setting, apply AC power only. Because a TRIAC is an AC device, it doesn't turn off when DC voltage is applied. Never connect a DC voltage to the external power of a TRIAC output. This also applies to a Delta Controls controller that is being powered from a DC source.

CAUTION: Never connect a DC voltage to the external power pin of a TRIAC output.

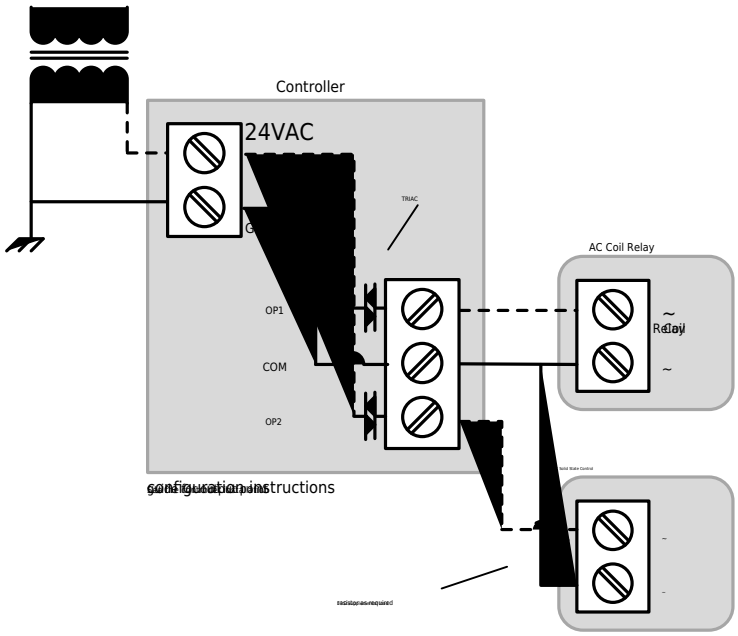

Figure 25: Wiring an Internally Powered Binary TRIAC Output

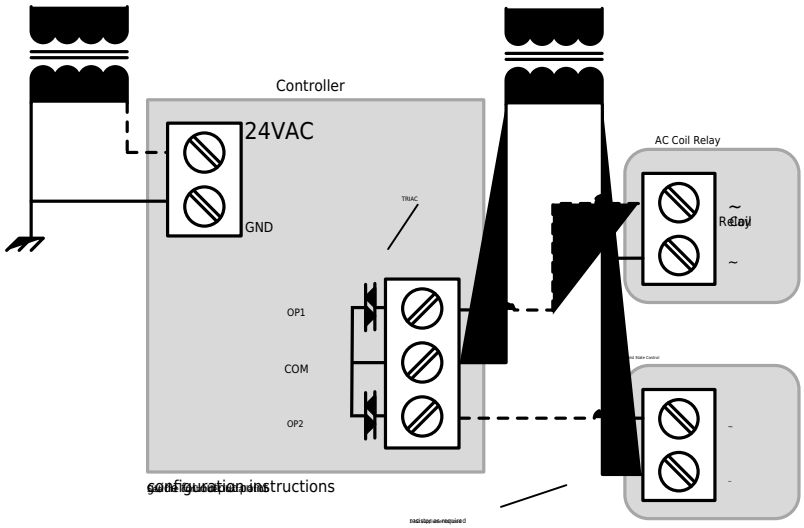

Figure 26: Wiring an Externally Powered Binary TRIAC Output

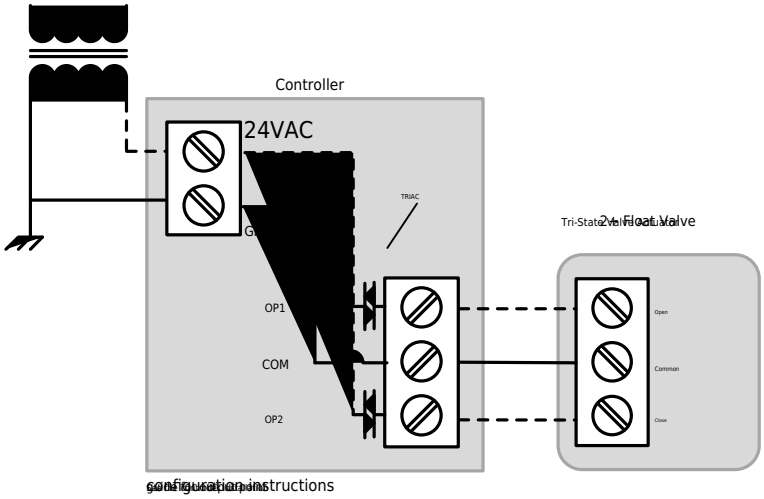

Figure 27: Wiring Tri-State Valve with an Internally Powered Binary TRIAC Output

TRIAC Leakage and Load Current Considerations

All TRIACs have a specified leakage current when in the off state. Delta Controls TRIAC outputs have a maximum leakage current of 100 µA. This amount of leakage is not normally high enough to cause concern. However, there are conditions when it could be enough to trigger a device. For devices that trigger on the leakage current, wire a 1 kΩ, 1 W resistor in parallel with the output to provide a path for the leakage current.

TRIACs require a minimum 25 mA current draw to turn on and off properly. When an AC solid-state relay load current is less than 25 mA, wire a 1 kΩ, 1 W resistor in parallel with the output to provide the additional current required to power the device, as shown in Figure 25 and Figure 26.

CAUTION: Wire a 1 kΩ 1 W resistor in parallel with the output when the load is an AC solid-state relay that draws less than 24 mA and the device being powered requires less than 100 µA

Copyright © Delta Intelligent Building Technologies (Canada) Inc.

to turn on.

Binary SSR Output

Binary SSR (solid state relay) outputs are used to provide switched 24 VAC or 24 VDC at up to 500 mA to an output device. On some controllers, the power source for the outputs is jumper selectable for internal or external power. When using the external power setting, the maximum voltage that can be applied is 28 VAC. Never connect line voltage to a binary output.

Category	Specification
Max external voltage	28 VAC 28 VDC
Max output current	500 mA
Max leakage current	100 µA for AC power 10 µA DC for DC power
Cable type	2-conductor 18 AWG (1.0 mm^2) unshielded (Belden 8461NH)
Max cable length	330 ft (100 m)
Minimum turn-on current	Not applicable for SSR outputs

Table 17: Binary SSR Output Specifications

CAUTION: Binary outputs are not meant to switch line voltage. Never connect line voltage to a binary output. Doing so will damage the controller.

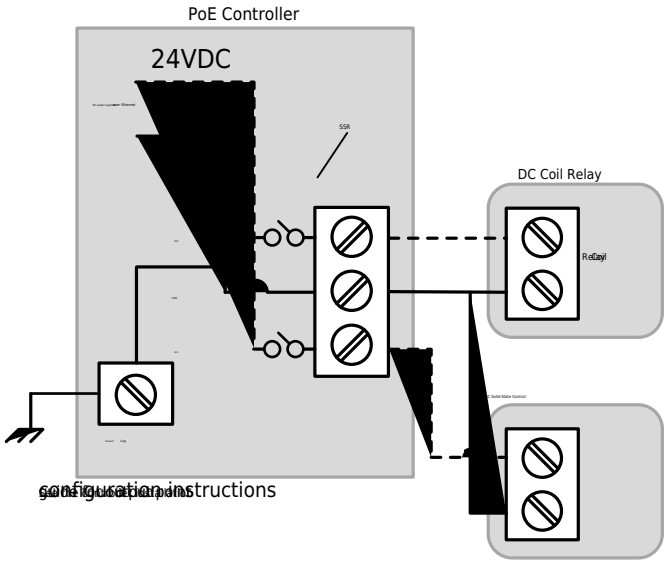

Figure 28: Wiring an Internally DC-Powered Binary SSR Output

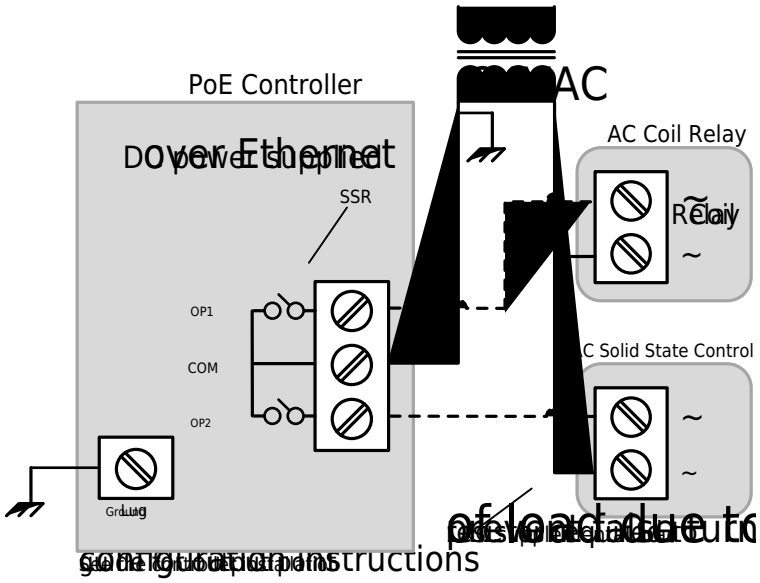

Figure 29: Wiring an Externally AC-Powered Binary SSR Output

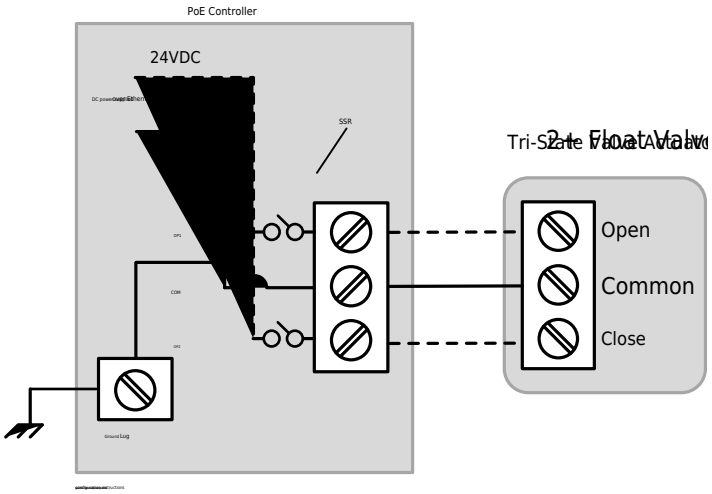

Figure 30: Wiring a Tri-State Valve with an Internally DC-Powered Binary SSR Output

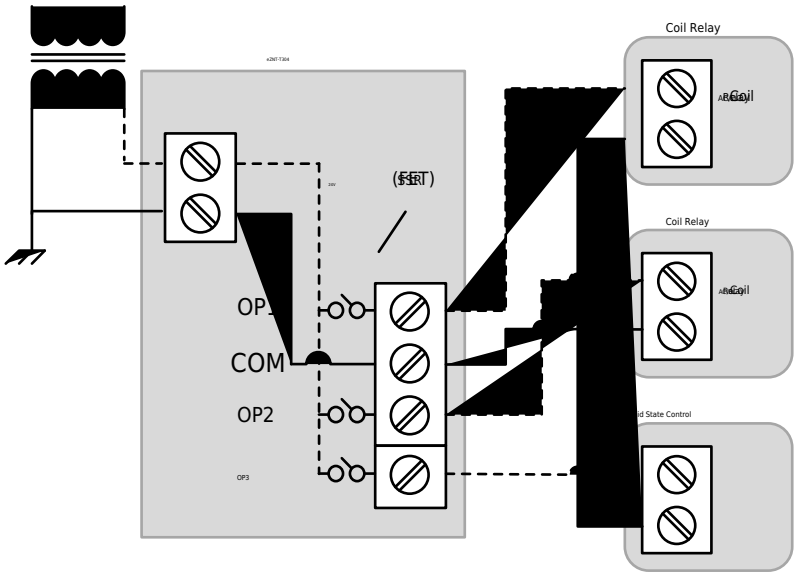

Figure 31: Wiring an Internally Powered Binary SSR Output (eZNT)

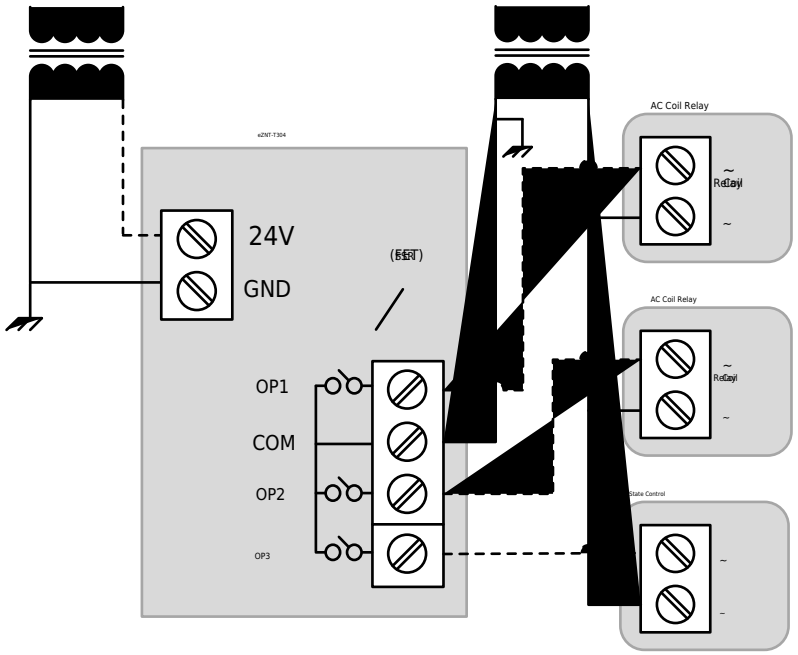

Figure 32: Wiring an Externally Powered Binary SSR Output (eZNT)

Binary FET Output

Binary FET (field effect transistor) outputs are used to provide switched 24 VAC or 24 VDC at up to 500 mA to an output device. On some devices, the power source for the outputs is jumper selectable for internal or external power. When using the external power setting, the maximum voltage that can be applied is 28 VAC. Never connect line voltage to a binary output.

Category	Specification
Max external voltage	28 VAC 28 VDC

Copyright © Delta Intelligent Building Technologies (Canada) Inc.

Category	Specification
Max output current	500 mA
Cable type	2-conductor 18 AWG (1.0 mm^2) unshielded (Belden 8461NH)
Max cable length	330 ft (100 m)
Minimum turn-on current	Not applicable for FET outputs

CAUTION: Binary outputs are not meant to switch line voltage. Never connect line voltage to a binary output. Doing so will damage the device.

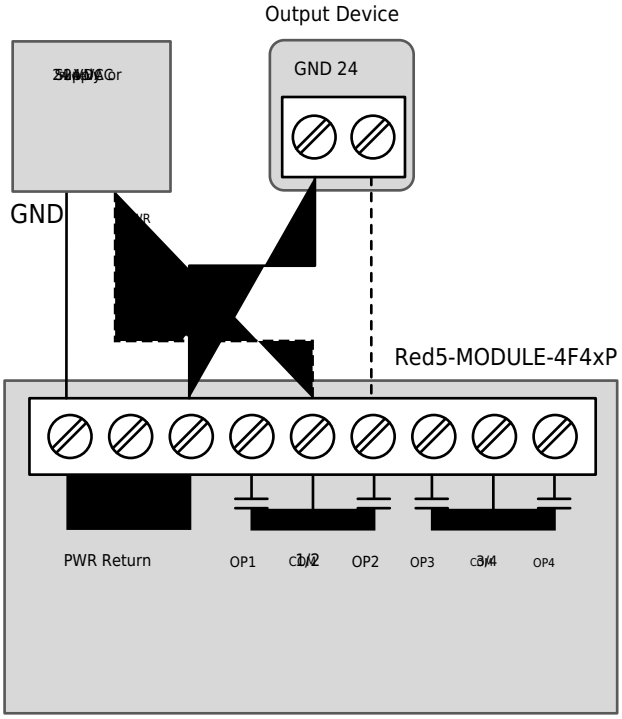

Figure 33: Wiring a Red5-MODULE-4F4xP for Single Output Device

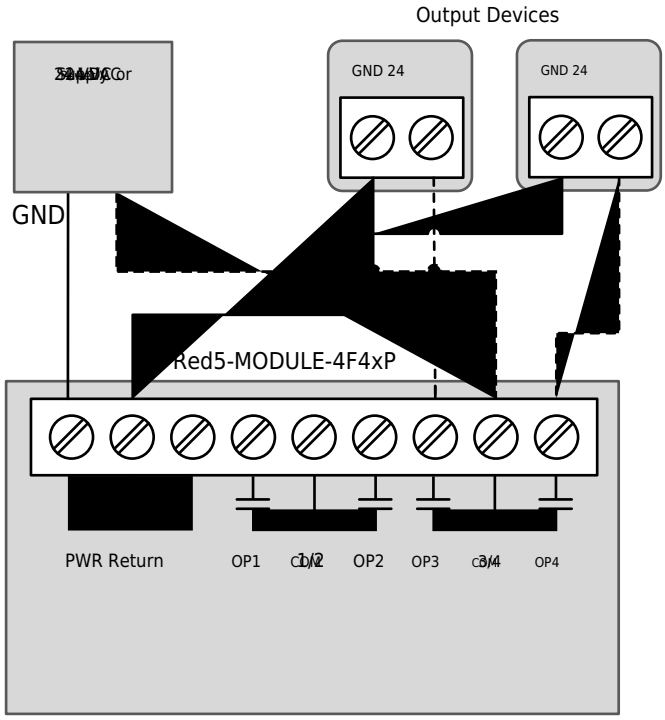

Figure 34: Wiring a Red5-MODULE-4F4xP for Multiple Output Devices

Binary Relay Output

Binary relay outputs are used to provide switched 24 VAC or VDC at up to 0.5 A to an output device. The power source for the relay output is jumper-selectable for internal or for external power source. Never connect line voltage to a binary output.

enteliBUS modules with TRIAC or relay outputs include a PTC (positive temperature coefficient) fuse on the power circuit that supplies each pair of outputs. When too much current is drawn by the device connected to an output, the fuse opens, and power is removed from that pair of outputs.

Category	Specification
Max external voltage	28 VAC 28 VDC
Max output current per relay	enteliBUS I/O modules: 500 mA when switching external power, 250 mA when switching internal controller-supplied power
Cable type	2-conductor 18 AWG (1.0 mm^2) unshielded (Belden 8461NH)
Max cable length	330 ft (100 m)

Table 19: Binary Relay Output Specifications

CAUTION: Binary outputs are not meant to switch line voltage. Never connect line voltage to a binary output. Doing so will damage the controller.

Copyright © Delta Intelligent Building Technologies (Canada) Inc.

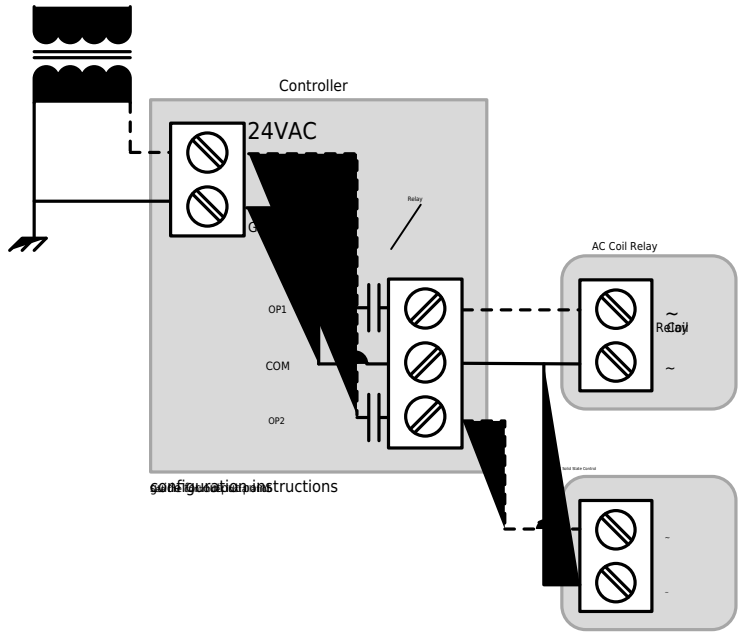

Figure 35: Wiring an Internally Powered Binary Relay Output

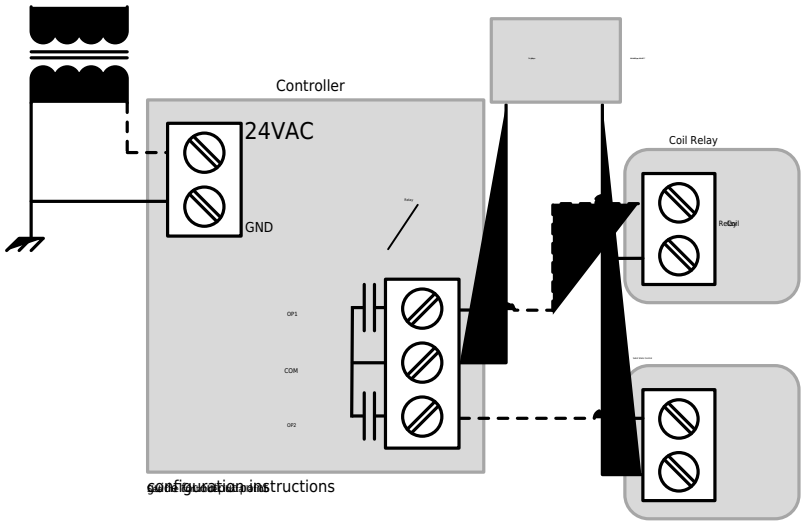

Figure 36: Wiring an Externally Powered Binary Relay Output

Wiring Internal/External Power Jumpers for Binary Outputs

Figure 37 and Figure 38 detail the jumpers for internally powered and for externally powered TRIAC and relay binary outputs.

Figure 39 and Figure 40 detail the jumpers for internally powered and for externally powered SSR binary outputs.

Copyright © Delta Intelligent Building Technologies (Canada) Inc.

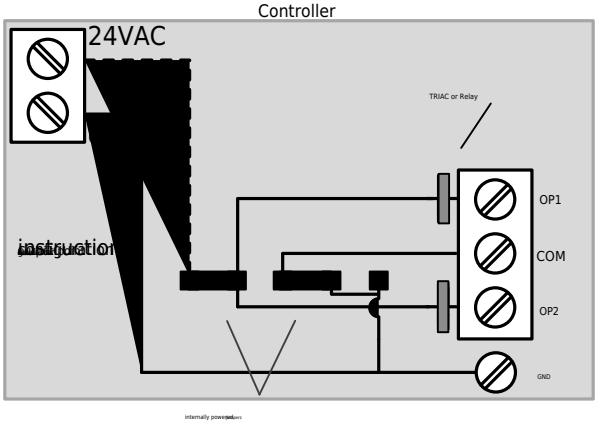

Figure 37: Internally Powered TRIAC and Relay Binary Output Jumper Details

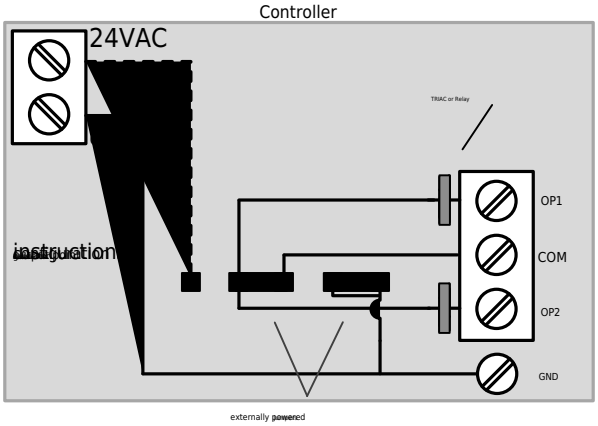

Figure 38: Externally Powered TRIAC and Relay Binary Output Jumper Details

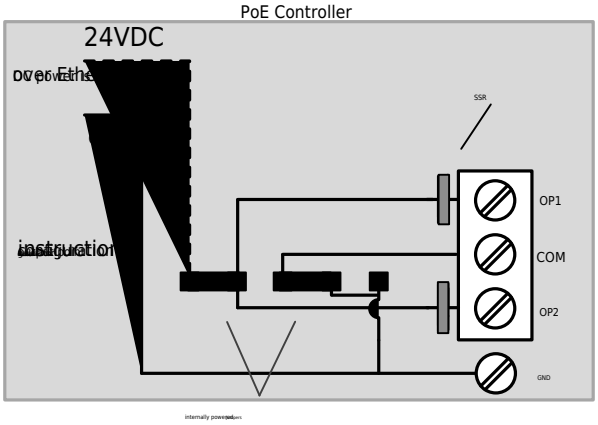

Figure 39: Internally Powered SSR Binary Output Jumper Details

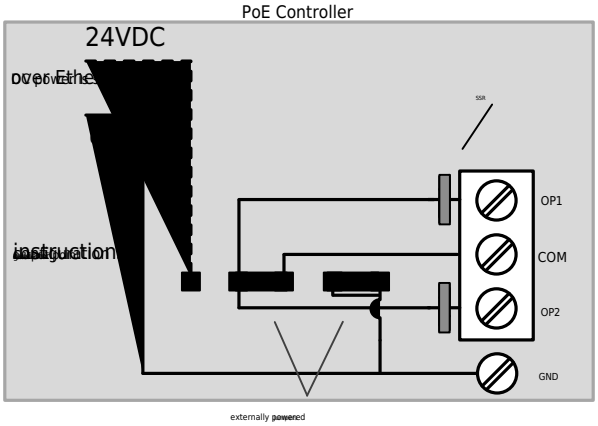

Figure 40: Externally Powered SSR Binary Output Jumper Details

T1L Guidelines

Termination

TRM-768 modules are not required for T1L networks as they are self-terminating (like Ethernet).

If installing a retrofit application, ensure that TRM-768 (or other terminators) are physically removed from the network, otherwise the T1L network will not function.

Retrofit Requirements

- For retrofits, ensure there are no hidden stars or “T” in a network.

Ethernet Network Installation

This section describes recommended design and installation specifications for an Ethernet (IEEE 802.3) network.

Communications Devices

Ethernet communications devices such as switches, hubs and routers provide flexibility and solve many network problems.

Switch

Switches improve network speeds compared to hubs because they allow full port speed to be used for

every pair of devices connected to the switch and they allow simultaneous communications paths to be established between devices. 10/100Base-T Ethernet networks that use switches are called switched networks and have no limitation as to number of segments or switches.

A switch also provides a central point of connection used in networks that are arranged in a star topology. We recommend using switches in all BACnet Ethernet networks.

Hub

A hub has no way of distinguishing which port the data should be sent to. Broadcasting the data to every port ensures that it will reach its intended destination. This places a lot of traffic on the network and can lead to poor network response times due to collisions.

A hub also provides a central point of connection used in networks that are arranged in a star topology. 10/100Base-T Ethernet networks that use hubs are called shared access networks and must adhere to the IEEE 5-4-3 rule: 5 segments, 4 hubs/repeaters, 3 populated segments. This rule limits the number of hubs and segments in the network. Switches, which do not have this limitation, have tended to replace hubs since the cost difference is negligible.

We recommend using switches rather than hubs in all BACnet Ethernet networks. A repeater is essentially a two-port hub.

Router

As an OSI Layer 3 device, a router moves packets (unlike switches, which route frames) from one network to another until that packet ultimately reaches its destination. A packet not only contains data but also the destination address where it’s going.

Interfacing to High-Speed Ethernet Networks

Some Delta Controls devices provide fixed 10 Mbps Ethernet that can’t adjust automatically to higher speeds, such as 100 Mbps. To interface to a high-speed Ethernet segment, insert a 10/100 Mbps switch between the high-speed segment and the Delta Controls segment. The switch senses and adjusts automatically to both segments’ speeds. Refer to the device specifications for supported speeds.

10/100Base-T Specifications

10/100Base-T is 10 Mbps Ethernet running over unshielded twisted pair (UTP) cabling. UTP cabling for Ethernet comes in different grades, with higher grade numbers called category numbers, indicating better quality and bandwidth. 10/100Base-T requires Cat5e/Cat6 cabling.

The UTP cable connection at either end is made by an RJ45 connector. These connectors are attached to the cable using a tool made specifically for this task.

Copyright © Delta Intelligent Building Technologies (Canada) Inc.

Category	Specification
Max segment length (port-to-port)	330 ft (100 m)
Cable type	10/100Base-T Cat5e/Cat6
Max segments using switches	No limit
Max segments using hubs/repeaters	See IEEE rule below

Table 20: Ethernet Specifications

The IEEE rule for shared access networks states that there shall be no more than five repeated segments or more than four hubs between any two Ethernet interfaces and of the five cable segments, only three may be populated. This rule is referred to as the “5-4-3” rule: 5 segments, 4 hubs/repeaters, 3 populated segments. The IEEE rule doesn’t apply to switched networks.

10/100Base-T Cable Wiring

10/100Base-T supports straight-through and crossover cable connections.



Figure 41: RJ45 Connector Pinout

On a straight-through data cable, Pin 1 on one end is connected to Pin 1 on the other end, and so on, for all 8 conductors. See the pinouts in Table 21.

Pinout End 1	Pinout End 2	Color
Pin 1 (TD+)	Pin 1 (TD+)	White/Orange
Pin 2 (TD-)	Pin 2 (TD-)	Orange
Pin 3 (RD+)	Pin 3 (RD+)	White/Green
Pin 4 (not used)	Pin 4 (not used)	Blue
Pin 5 (not used)	Pin 5 (not used)	White/Blue
Pin 6 (RD-)	Pin 6 (RD-)	Green
Pin 7 (not used)	Pin 7 (not used)	White/Brown

Copyright © Delta Intelligent Building Technologies (Canada) Inc.

Pinout End 1	Pinout End 2	Color
Pin 8 (not used)	Pin 8 (not used)	Brown

Table 21: Wiring Pinout for Straight-Through Data Cable

Power over Ethernet (PoE)

For detailed information about wiring and powering a PoE controller, refer to the product's installation guide.

RS-485 Network Installation

This section describes recommended design and installation specifications for an RS-485 network.

Cable Type

RS-485 network cable must meet the following specifications:

- 24–22 AWG (0.25–0.5 mm^2) twisted pair, shielded jacketed communication cable
- Characteristic impedance of 100–120 Ω
- Capacitance of 17 pF/ft conductor-to-conductor or less (18 AWG / 1.0 mm^2 cable doesn't meet this specification)
- Braided or aluminum foil shield
- Velocity of propagation of 66% or higher

Compatible cable products include Belden 9841, Belden 82841, and Windy City Wire 42002-S.

For details about UL 864 cable specifications, refer to the UL 864 product's installation guide.

Network Configuration

Delta Controls RS-485 networks must use a daisy chain configuration. That is, there is one cable with two ends, and every network device is connected directly along its path.

Controllers can be placed in any position along the RS-485 daisy chain—in the middle, at the end, or anywhere in between—as long as the electrical ends are properly terminated.

Copyright © Delta Intelligent Building Technologies (Canada) Inc.

Maximum RS-485 Network Cable Length

Using proper cable, the maximum length of an RS-485 twisted pair network segment is 4000 ft (1220 m). A segment of this length works reliably for data rates up to 76800 bps.

Maximum Number of Nodes

Typically, a maximum of 64 nodes are allowed on a network segment. However, some devices allow more. For devices that allow more than 64 nodes, a repeater is required after 64 nodes.

In Figure 42 there are five nodes: one node for the system controller plus four for the other controllers. A maximum of 99 nodes are allowed on a network (with a repeater).

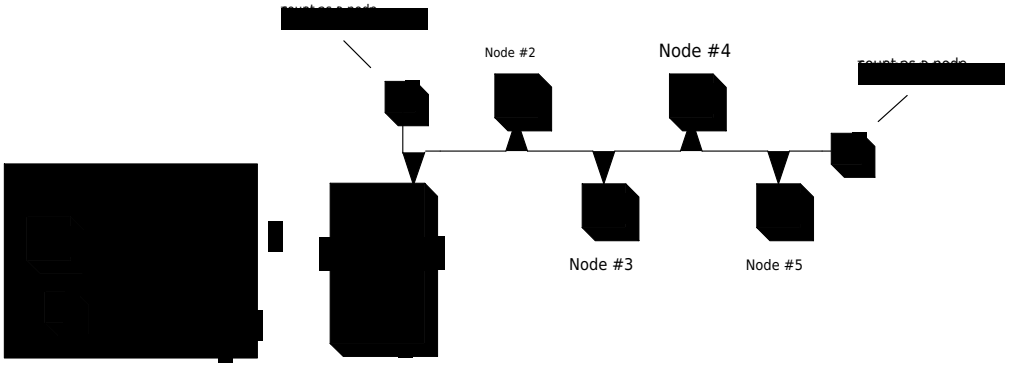

Figure 42: Five Node Network Example

Shield Continuity and Termination

When properly installed, shielded twisted pair cable improves the protection of the network and equipment against harmful electromagnetic interference (EMI) and transient voltage spikes.

Proper installation of the cable's shield involves two steps:

1. Ensuring shield continuity by tying the shield through at each node
2. Terminating the shield

When the network shield is connected to different ground potentials, current flows through the shield and induces noise into the network. This causes unreliable network communications and could damage the controllers.

Copyright © Delta Intelligent Building Technologies (Canada) Inc.

Ensuring Shield Continuity

The cable's shield must be tied through at each node to make a continuous shield that runs the entire length of the RS-485 segment, as shown in Figure 43 and Figure 44. Do not connect the shield to ground at the node.

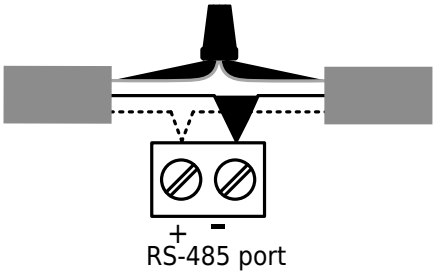

Figure 43: No Built-In Shield Termination

As shown in Figure 44, some Delta Controls devices (such as enteliBUS and eZNTs) come with a three-terminal RS-485 port. The SHD terminal is connected via a capacitive path to ground similar to the Shield terminal on the TRM-768 Network Terminator.

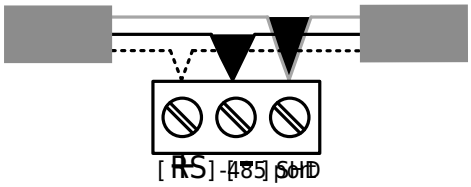

RS-485 port with built-in shield termination

Figure 44: Built-In Shield Termination

Terminating the Shield

In a typical RS-485 network segment, the shield, along with the data wires, are terminated with a TRM-768 terminator at both ends of the segment, as shown in Figure 45 below.

While the recommendation for terminating the shield at both ends may seem to contradict the RS-485 standard, RC circuitry components in the TRM-768 provide a transient path to ground while preventing ground loops. By always terminating the shield at both ends with a TRM-768, the installer doesn't inadvertently ground the shield incorrectly.

Some Delta Controls devices provide the built-in equivalent to the TRM-768 for terminating the shield, as shown in Figure 44.

Network Data Wires End-of-Line

Copyright © Delta Intelligent Building Technologies (Canada) Inc.

Termination

The data wires at both ends of an RS-485 network segment must be terminated to ensure reliable operation. Proper termination ensures network stability and helps to prevent damage to controllers during high electrical activity.

Termination is effective only when proper RS-485 network cable is used. Otherwise, termination may provide unpredictable results.

Two methods can be used to terminate network data wires:

- Using two TRM-768s
- Using one TRM-768 and a device's built-in termination

Using Two TRM-768s

Using a TRM-768 at each end for terminating a RS-485 network provides the most reliable results by providing proper transient protection and proper protection against electromagnetic interference. Use this method whenever possible.

After the last node on each end of an RS-485 network, install a TRM-768. The TRM-768 provides the correct termination impedance not only for the network data wires but also for the network cable shield.

Keep the stub cable from the last node to the TRM-768 as short as possible—no longer than 12 inches (30 cm). A long stub will cause a significant impedance mismatch and create reflections. The RS-485 specification doesn't specify maximum stub length.

The TRM-768 provides a capacitive path for the shield to ground and additional protection through a 180 V MOV.

Connect the TRM-768 network terminators to earth ground, as shown in Figure 45.

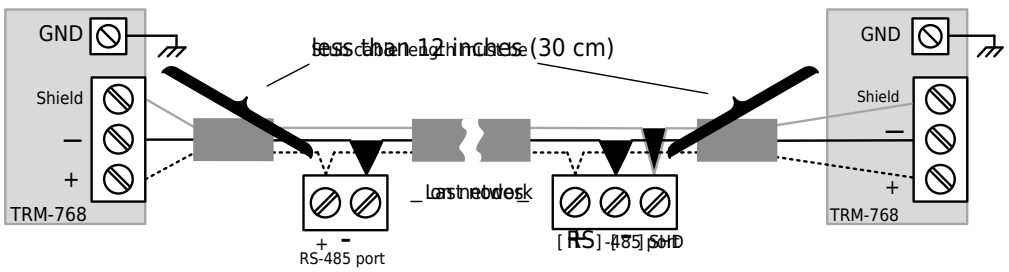

Figure 45: Data Wire Termination Using Two TRM-768s

Using One TRM-768 and Built-In Termination

Several Delta Controls products include built-in termination. Refer to the product installation guide to confirm. Most products with built-in termination also provide onboard shield termination but some older

Copyright © Delta Intelligent Building Technologies (Canada) Inc.

products do not. In that case, the network cable shield is terminated at the TRM-768 end of the network and left unconnected at the controller end as shown in Figure 46.

Never connect the shield directly to the ground. Differences in ground potentials in large buildings can cause current to flow. When the shield is connected to two different ground potentials, the resulting current induces noise into the network.

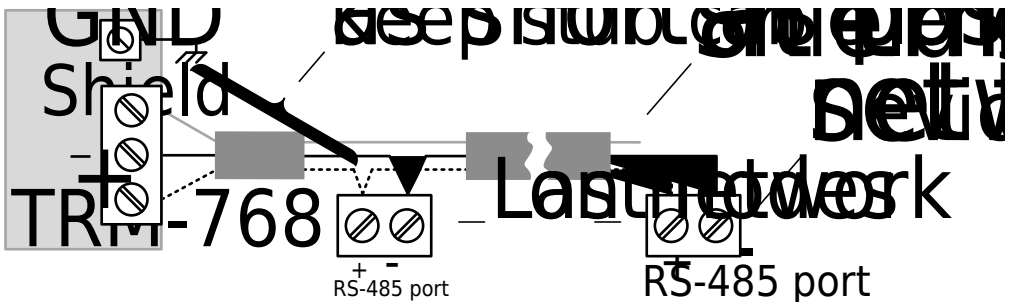

Figure 46: Data Wire Termination Using One TRM-768 and Built-In Termination

Twisted Pair and Three-Wire Isolated Devices

Some MS/TP RS-485 devices from third-party manufacturers provide a third-wire reference connection for the network data wires. To meet RS-485 requirements, the third-wire reference must be connected to the same earth ground reference as the two-wire non-isolated devices.

The following three scenarios apply:

- Twisted pair cable in building
- Three conductor cable in building
- Extending twisted pair cable with three conductor cable

The “third wire reference” is not the same as the cable shield. Regardless of whether the network cable is twisted pair only or twisted pair with a third-wire reference conductor, the shield is separate and is installed as described in Shield Continuity and Termination.

Twisted Pair Cable

When the RS-485 cable is two-wire twisted pair, that is, cable with no third conductor for common reference, and a three-wire isolated device is present, connect the device’s third-wire reference to earth ground using one of the following methods for the earth connection:

- Connect via 100 Ω resistor to cable shield
- Connect via 100 Ω resistor to the device’s earth ground point such as the device enclosure

Copyright © Delta Intelligent Building Technologies (Canada) Inc.

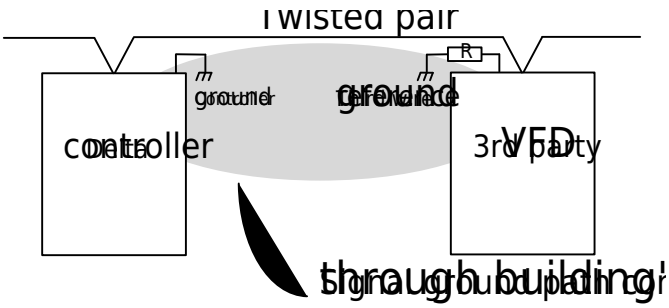

Figure 47: Twisted Pair Cable with Mixed Devices

Three Conductor Cable

When the RS-485 cable is three conductor cable—that is, a two-wire twisted pair with a third conductor for common reference—and the installation includes both two-wire non-isolated devices and three-wire isolated devices, then the following guidelines apply:

- Install the two-wire non-isolated devices according to the guidelines in this section
- Connect the third-wire reference connectors on the three-wire isolated devices to the third conductor in the cable
- Connect the third conductor in the cable through a single 100 Ω resistor to earth ground in a low-noise area, preferable near the supervisory controller. This earth ground must be the same earth ground that the two-wire non-isolated devices are connected to.

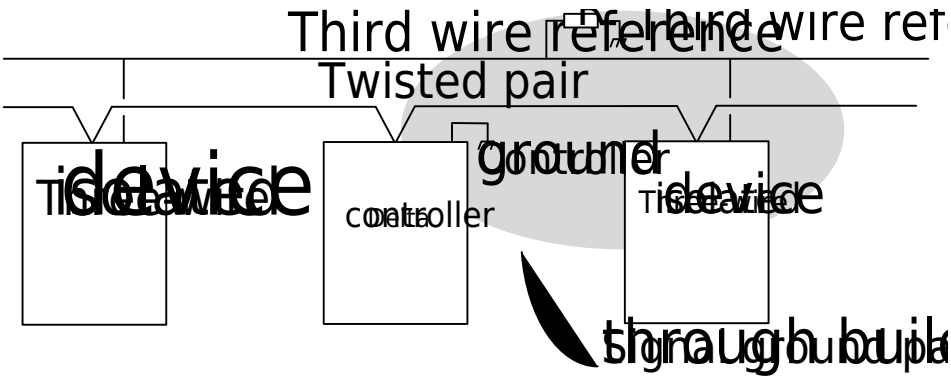

Figure 48: Three Conductor Cable with Mixed Devices

Extending Twisted Pair Cable with Three Conductor Cable

When the RS-485 cable is two-wire twisted pair and you need to extend the installation with three-wire isolated devices and three conductor cable, then the following guidelines apply:

- Install the two-wire twisted pair and the cable shield in the three-conductor cable according to the guidelines in this chapter
- Connect the third-wire reference connectors on the three-wire isolated devices to the third conductor in the cable

Copyright © Delta Intelligent Building Technologies (Canada) Inc.

- Connect the third conductor in the cable through a single 100 Ω resistor to earth ground in a low-noise area, preferable near the supervisory controller. This earth ground must be the same earth ground that the two-wire non-isolated devices are connected to.

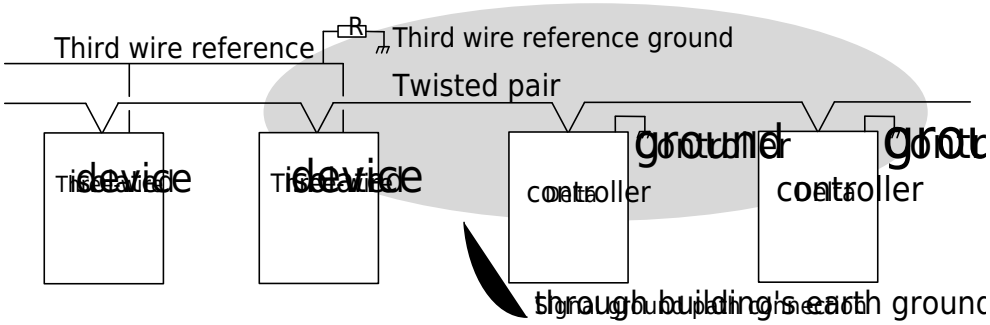

Figure 49: Extending Twisted Pair Cable with Three Conductor Cable

Repeaters

A repeater strengthens the RS-485 signals to allow a network to be extended to accommodate more than 64 nodes.

The DZNR-768 multi-port repeater currently supports only twisted pair MS/TP wiring methods for Delta Controls RS-485 networks. Each of the repeater's four ports divides the network into a separate segment.

No more than 64 nodes are allowed on an RS-485 segment and no more than 99 nodes are allowed per network. All standards in this document for wire length, shielding, and grounding must be followed for each wiring segment.

> **NOTE:** Not all system devices allow 64 nodes. Check the device specifications to confirm the allowable number of nodes.

The network's system controller is normally placed on DZNR-768 port 1. Ports 2, 3 and 4 are used to interconnect the remaining nodes.

Differences between Rev 1.1 and Rev 1.2 DZNR-768 Repeater

The DZNR-768 Rev. 1.2 hardware was released in 2013 to replace the DZNR-768 Rev. 1.1 hardware. Rev 1.2 changed the enclosure and added twisted pair terminals to ports 3 and 4. Otherwise, both revisions perform the same functions.

Using a DZNR-768 Rev 1.2 Repeater with Twisted Pair Network

Figure 50 illustrates the recommended use of the DZNR-768 Rev 1.2 repeater and terminators in a twisted pair RS-485 network.

Copyright © Delta Intelligent Building Technologies (Canada) Inc.



Figure 50: Twisted Pair Segments and DZNR-768 Rev 1.2 Repeater

Using Repeaters Incorrectly

Do not install repeaters in series or use more than one repeater to extend a network. This results in network reliability problems. Figure 51 demonstrates an incorrect use of a repeater in an RS-485 network.

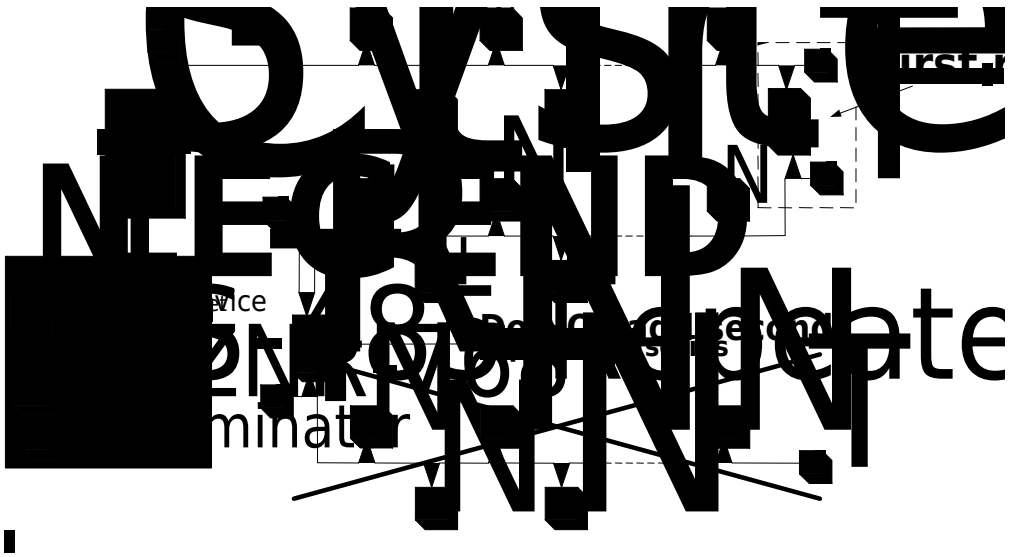

Figure 51: Incorrect Use of Repeaters

Running RS-485 between buildings or

electrical services

Although running RS-485 communications between buildings may be an installation requirement, doing so greatly increases the network's exposure to communication problems and/or damage to equipment.

Instead, networks between multiple buildings or electrical services should be interconnected at the Ethernet/IP level, using fiber optic links. Nearly all modern managed switches include one or more SFP slots, to which fiber media converters can be connected. For details, review the documentation for the network switch.

If RS-485 must be used, the most reliable method of running RS-485 between buildings is by using RS-485-to-fiber optic repeaters. By utilizing a fiber link, you eliminate the electrical connection and dramatically reduce exposure to damage due to inherent voltage transients and to lightning.

We don't manufacture a RS-485-to-fiber optic repeater. However, the Telebyte Model 276A Optoverter – 2 Wire, RS-485 to Fiber Optic Line Driver/Converter has been used effectively in a number of installations. Because this is a third-party device, we can't guarantee its future compatibility with our products.

Figure 52: Using RS-485-to-Fiber Optic Repeaters between Buildings

Transients and RS-485 Transceiver Failure

High voltage transients are the primary cause of RS-485 transceiver failure. Although there is no way to completely eliminate voltage transients, their harmful effects can be reduced by using the techniques previously described in this document.

A rapid drop in line voltage at one controller on a network results in a voltage transient. The parasitic capacitance of electronic devices allows this transient to pass over the RS-485 network as it tries to equalize the voltage difference between devices.

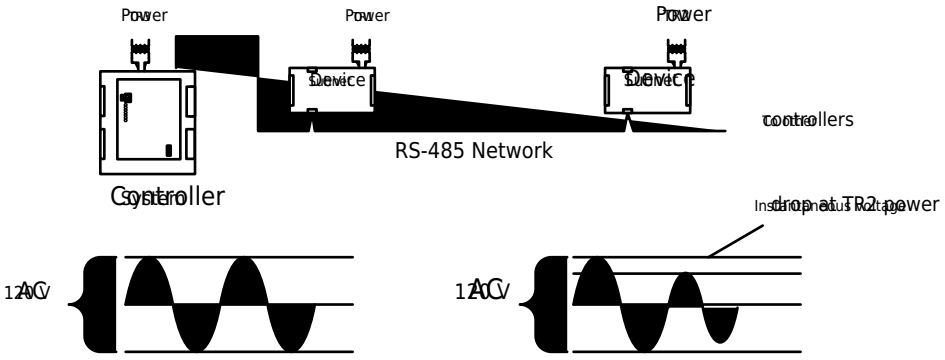

Figure 53: Voltage Transient Example

In Figure 53, if the line voltage at TR2 (Transformer 2) drops rapidly and other line voltages (TR1 and TR3) remain constant, the rapid drop results in a voltage transient that may cause damage to the RS-485 communication chips. Using a dedicated line voltage source for all control device power, such as 120 to 24 VAC transformers, significantly improves your chances of completing a project successfully.

LINKnet Networks

LINKnet is an RS-485 network, therefore all guidelines described in this chapter apply. For a LINKnet network, we recommend a maximum network length of 1000 ft (305 m).

In a limited LINKnet network, termination of the network data wires is not required when the number of nodes is three or less, including the LINKnet master controller, and the cable length is less than 100 ft (30 m).

For example, suppose you have two eZNS devices on a limited LINKnet network as shown in Figure 54. Since there are only three nodes on this network and the overall network length is 100 ft (30 m), it is not necessary to install network terminators. In this case, connect the shield to the LINKnet master controller's ground lug and leave it unconnected at the other end of the LINKnet network.

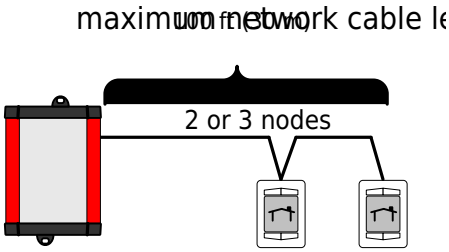

Figure 54: Limited LINKnet Network Example

The master controller can be placed in any position along the LINKnet daisy chain—in the middle, at the end, or anywhere in between.

enteliBUS Network Installation

This section describes recommended design and installation specifications for an enteliBUS (eBUS) network.

Cable Type

The eBUS network can be extended with cable that meets all of the following specifications:

- 24–22 AWG (0.25–0.5 mm^2) twisted pair, shielded jacketed communication cable
- Characteristic impedance of 100–120 Ω
- Capacitance of 17 pF/ft conductor-to-conductor or less (18 AWG / 1.0 mm^2 cable doesn't meet this specification)

Copyright © Delta Intelligent Building Technologies (Canada) Inc.

- Braided or aluminum foil shield
- Velocity of propagation of 66% or higher

Suggested compatible cable products are Belden 9841, Belden 82841, and Windy City Wire 42002-S.

Network Configuration

The eBUS network uses a daisy chain configuration. The eBUS network has two ends joined by a single path comprising one enteliBUS controller backplane and multiple enteliBUS expander backplanes.

The backplanes are connected to each other by plugging them together by the connectors at each end of the backplanes or by wiring network cable between the backplane connectors. Any combination of plugging backplanes together and wiring them with network cabling is acceptable as long as the daisy chain configuration is maintained.

Figure 55 shows an example eBUS network.

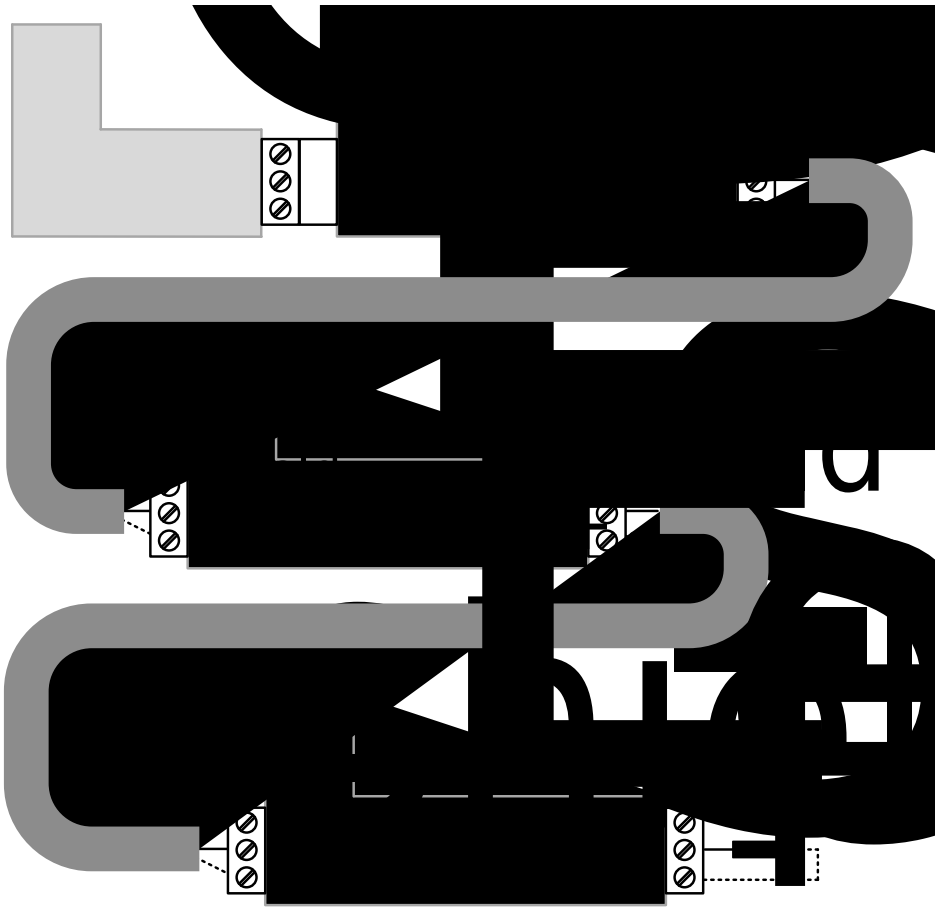

Figure 55: eBUS Network Configuration Example

Maximum Network Length

The maximum end-to-end length for an eBUS network is 330 ft (100 m).

End-to-end means from the automation engine on the controller backplane at one end of the network to the eBB-TERM terminator at the other end taking into account all enteliBUS expander backplane boards and network cable in between them.

Maximum Number of enteliBUS Backplanes

The eBUS network allows one controller backplane and up to eight expander backplanes for a total maximum of nine backplanes.

Shield Continuity and Termination

When properly installed, shielded twisted pair cable can improve the protection of the network and equipment against harmful electromagnetic interference (EMI) and transient voltage spikes.

Ensuring Shield Continuity

The eBUS network cable’s shield must be tied through at each expander backplane to make a continuous shield that runs the entire length of the eBUS network, as shown in Figure 59.

Terminating the Shield

Do not ground the shield at any point in the eBUS network. The shield is not terminated or grounded on the last expander backplane at the eBB-TERM terminated end of the eBUS network. Leave the shield unconnected.

At the automation engine end, shield termination is built-in, providing a transient path to ground. Do not otherwise terminate or ground the shield at the automation engine.

Network Data Wires Termination

Both ends of the eBUS network data wires must be terminated properly to ensure reliable operation and network stability.

As shown in Figure 55, the eBUS network data wires must be terminated on the last expander backplane using the eBUS terminator, eBB-TERM. Do not use a TRM-768.

Copyright © Delta Intelligent Building Technologies (Canada) Inc.

At the automation engine end, termination is built in. No additional termination is required.

Repeaters

Repeaters are not used or required in an eBUS network.

Running the eBUS Network between Buildings

Do not run the eBUS network between buildings or between areas of a building with different electrical services.

Running the eBUS Network between Electrical Services

Do not run the eBUS network between electrical services. All expander backplane modules must be powered by the same electrical service.

Red5BUS Network Installation

This section describes recommended design and installation specifications for a Red5BUS network.

Cable Type

The Red5BUS network can be extended using cable that meets the following specifications:

- 24–22 AWG (0.25–0.5 mm^2) twisted pair, shielded jacketed communication cable
- Characteristic impedance of 100–120 Ω
- Capacitance of 17 pF/ft conductor-to-conductor or less (18 AWG / 1.0 mm^2 cable doesn't meet this specification)
- Braided or aluminum foil shield

Suggested compatible cable products are Belden 9841, Belden 82841, and Windy City Wire 42002-S.

Network Configuration

O3-HUB devices and remote Red5-MODULE devices can be connected to a Red5 controller over the Red5BUS using the controller's NET3 port. Connection to remote Red5 modules also requires a Red5-EXPAND-04 device.

The network uses a daisy chain configuration. Stars or stub configurations are not supported.

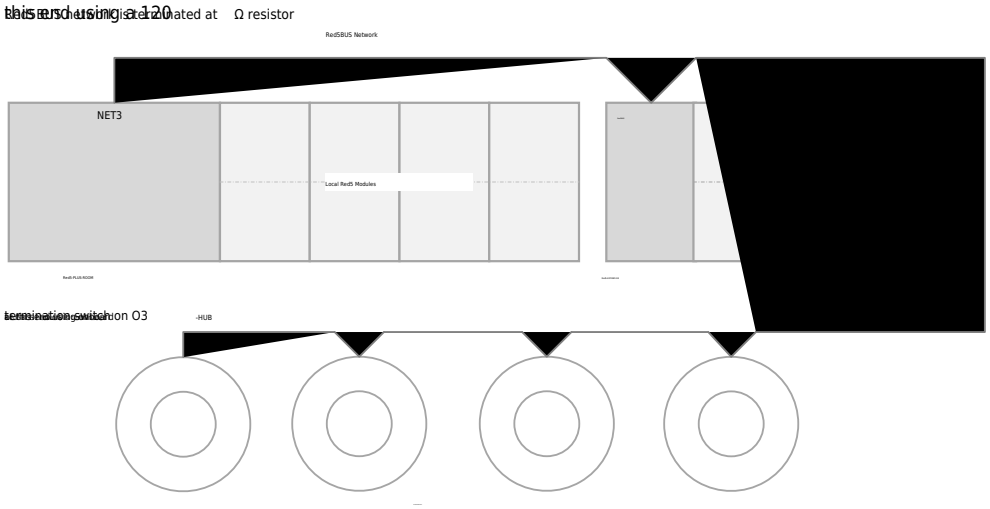

Figure 56: Red5BUS Network Configuration Example

Maximum Network Length

The maximum end-to-end length for a Red5BUS network is 230 ft (70 m).

Shield Continuity and Termination

When properly installed, shielded twisted pair cable can improve the protection of the network and equipment against harmful electromagnetic interference (EMI) and transient voltage spikes.

Ensuring Shield Continuity

The network cable's shield must be tied at each node on the Red5BUS network to make a continuous shield that runs the entire length of the network.

Terminating the Shield

Do not ground the shield at any point on the Red5BUS network.

Connect the shield to the Shield pin of the NET3 or Red5BUS port connector of each device on the

Red5BUS network.

Network Data Wires Termination

Both ends of the Red5BUS network data wires must be terminated properly to ensure reliable operation and network stability.

Terminating the Red5BUS Network at the Controller

On Red5 controllers installed at either end of the Red5BUS daisy chain, move the onboard termination switch to the TERM position to set termination for the NET3 port. On older O3-DIN controllers without a termination switch, use a 120 Ω termination resistor across the NET3 port pins, as shown in Figure 57.

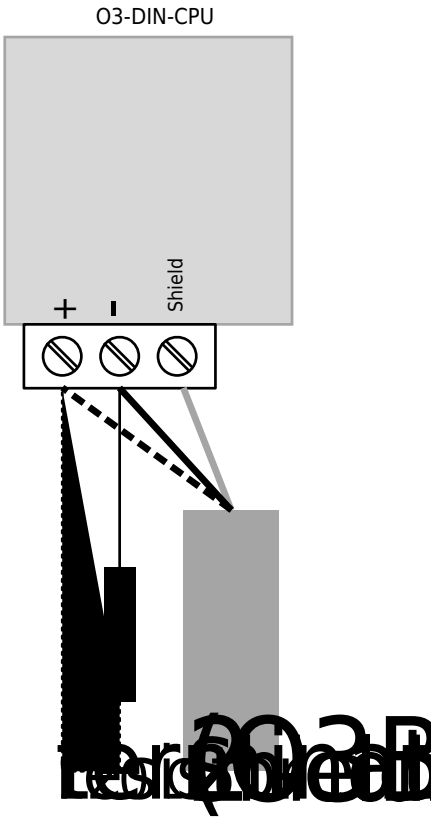

Figure 57: Termination at Controller NET3 Port

Terminating the Red5BUS Network at the O3-HUB

On O3-HUB devices installed at either end of the Red5BUS daisy chain, move the onboard termination switch to the TERM position.

Terminating the Red5BUS Network at the Red5-EXPAND-04

On Red5-EXPAND-04 devices installed at either end of the Red5BUS daisy chain, move the onboard

Copyright © Delta Intelligent Building Technologies (Canada) Inc.

termination switch to the TERM position.

Glossary

Daisy chain. A network topology in which there is one cable with only two ends, and every network device is connected directly along its path.

Earth ground. Provides metallic continuity to the Earth; sometimes referred to as conduit ground. In this document, earth ground is indicated by ⏚.

Electrical service. The wiring that connects the electric utility's cables in the street to the building. Specifically, electrical service is the wiring from the street, through the meter and up to the panel board, but no farther.

Grounding or ground. Provides metallic continuity to a common return path for current from many different components in an electrical circuit. The terms ground and grounding are used in North American electrical practice. In the UK the equivalent terms are earth and earthing.

Hub. An OSI Layer 1 device used in an Ethernet network that repeats data frames received at any of its ports to all ports in the device.

Line voltage. Voltage provided by a power line at the point of use, usually a general-purpose alternating current (AC) electric power supply. Also known as mains.

Node. Any device with an active RS-485 network connection including system controllers, VAV controllers, application controllers, BACstats, enteliBUS automation engines, repeaters, and so on. A node is also used for a device on a Red5BUS network.

PoE. Power over Ethernet describes a system which passes electrical power along with data on Ethernet cabling. This allows a single cable to provide both the data connection and the electrical power to Delta Controls PoE-enabled controllers.

Repeater. A node that joins two RS-485 segments. A repeater strengthens the RS-485 signals to allow a network to be extended.

Router. An OSI Layer 3 device used in an Ethernet network that move packets (unlike switches which route frames) from one network to another until that packet ultimately reaches its destination.

Segment. In an RS-485 network, the network cable between terminators or between a terminator and a repeater. In an Ethernet network, the network cable between switches.

Switch. As an OSI Layer 2 device used in an Ethernet network, a switch uses the MAC address in each data frame to send it only to the port connecting the device the data is intended for. A switch extends the reach of each segment and allows traffic to pass selectively between two network segments.

Terminating or **terminate RS-485 data wires**. Provides a path with correct impedance between the RS-485 data wires.

Terminating or **terminate shield**. Provides an isolating path to ground using resistive and/or capacitive components.

Copyright © Delta Intelligent Building Technologies (Canada) Inc.

KbA3490: CON-T1L Wiring Guidelines / Best Practices

Delta Controls

Copyright Information

No part of this document may be reproduced, transmitted, transcribed, stored in a retrieval system or translated into any language (natural or computer), in any form or by any means, without the prior written permission of Delta Controls Inc.

Limited permission is granted to reproduce documents released in Adobe Portable Document Format(PDF) electronic format in paper format. Documents released in PDF electronic format may be printed by end users for their own use using a printer such as an inkjet or laser device. Authorized distributors of Delta Controls Inc. products (Delta Partners) may print PDF documents for their own internal use or for use by their customers. Authorized Delta Partners may produce copies of released PDF documents with the prior written permission of Delta Controls Inc.

Information in this document is subject to change without notice and does not represent a commitment to past versions of this document on the part of Delta Controls Inc. Copyright ©2025 Delta Controls Inc. All rights reserved

Table of Contents

1. Overview
2. Grounding
3. What we've tested
4. Retrofit Guidelines
5. Troubleshooting
6. Affected Products
7. Technical Services Secret Information

Overview

T1L is a new technology without clear wiring specifications. Proceed with caution until we have built up internal knowledge on what is supported and recommended. The following is what we know based on our own testing and installations to date.

Unlike MS/TP, T1L regenerates the signal at each connection (just like an Ethernet switch), so the recommended distance applies to the max distance between 2 T1L devices.

Grounding

As T1L is galvanically isolated, it removes the ground requirement. Each port is isolated so you don't need to tie the shields together for ground continuity, however we still highly recommend you connect the shield to account for ground interference.

What we've tested

This table will be updated as we learn more information based on internal and external testing.

Wiring Type	Max Tested Wiring Distance (between 2 T1L devices)	Typical Beta Wiring between 2 devices	Additional Notes	Test Results	Test Location
24AWG stranded shielded	609m		Less than 50 ohm total line impedance	Passed*	Internal test wall
18AWG shielded stranded	TBD	50m-100m	Line impedance and capacitance unknown	Passed	Beta site
22AWG shielded stranded	TBD	50m-100m	Line impedance and capacitance unknown	Passed	Beta site

**If you exceed this distance, the network quality significantly declines.*

Retrofit Guidelines

Requirements:

- Measure cable quality, length, and impedance, i.e., identify open shorts or impedance mismatches (i.e., two different types of wire spliced in one run).
- A picoscope eye diagram tool can be used to verify and test existing wire (How to identify 24V polarity and grounding issues on MS/TP networks)
- Check if existing cables can support T1L.

Copyright © Delta Intelligent Building Technologies (Canada) Inc.

Troubleshooting

In development

Affected Products

CON-T1L